INDEPENDENT ELECTORAL AND BOUNDARIES COMMISSION

REPUBLIC OF KENYA

TENDER DOCUMENT

IEBC/OT/21/06/2020-2021

SUPPLY AND DELIVERY OF ASSORTED NON-STRATEGIC ELECTION MATERIALS ON A THREE YEAR FRAMEWORK CONTRACT

CLOSING DATE: 15TH JUNE, 2021 AT 11:00 AM EAST AFRICAN TIME

Table of Contents

.....1

INVITATION TO TENDER.....3

PART 1 - TENDERING PROCEDURES.....5

SECTION I: INSTRUCTIONS TO TENDERERS.....6

SECTION II – TENDER DATA SHEET (TDS).....27

SECTION III - EVALUATION AND QUALIFICATION CRITERIA.....31

SECTION IV - TENDERING FORMS.....38
FORM OF TENDER.....39
SELF-DECLARATION FORMS.....44
DECLARATION AND COMMITMENT TO THE CODE OF ETHICS.....46
APPENDIX 1- FRAUD AND CORRUPTION.....47
TENDERER INFORMATION FORM.....50
TENDERER'S ELIGIBILITY- CONFIDENTIAL BUSINESS QUESTIONNAIRE FORM.....51
TENDERER'S JV MEMBERS INFORMATION FORM.....54
Price Schedule Forms.....55
FORM OF TENDER SECURITY - DEMAND BANK GUARANTEE.....60
FORM OF TENDER SECURITY (TENDER BOND).....61
FORM OF TENDER-SECURING DECLARATION.....62
MANUFACTURER'S AUTHORIZATION FORM.....63

PART 2: SUPPLY REQUIREMENTS.....64

SECTION V - SCHEDULE OF REQUIREMENTS.....65

PART 3 - CONDITIONS OF CONTRACT AND CONTRACT FORMS.....87

SECTION VI - GENERAL CONDITIONS OF CONTRACT.....88

SECTION VII - SPECIAL CONDITIONS OF CONTRACT.....102

SECTION VIII - CONTRACT FORMS.....106
FORM No 1: NOTIFICATION OF INTENTION TO AWARD.....107
FORM NO 2: NOTIFICATION OF AWARD - LETTER OF ACCEPTANCE.....110
NOTIFICATION OF AWARD - LETTER OF ACCEPTANCE.....111
FORM NO 3 - CONTRACT AGREEMENT.....112
FORM NO. 4 - PERFORMANCE SECURITY [Option 1 - Unconditional Demand Bank Guarantee].....114
FORM No. 5 - PERFORMANCE SECURITY [Option 2– Performance Bond].....115
FORM NO. 6 - ADVANCE PAYMENT SECURITY [Demand Bank Guarantee].....117

INVITATION TO TENDER

4TH JUNE, 2021

TENDER NO: IEBC/OT/21/06/2020-2021

SUPPLY AND DELIVERY OF ASSORTED NON-STRATEGIC ELECTION MATERIALS ON A THREE YEAR FRAMEWORK CONTRACT

The Independent Electoral and Boundaries Commission (IEBC) invites sealed tenders for the **Supply and Delivery of Assorted Non-Strategic Election Materials on a Three Year Framework Contract in the following Lots:**

Lot 1: Supply and Delivery of Sisal Agricultural Baler Twines - YOUTH

Lot 2: Supply and Delivery of Branded Posters - WOMEN

Lot 3: Supply and Delivery of Gas lamp mantles - YOUTH

Lot 4: Supply and Delivery of Branded Badges - WOMEN

1.1 Tendering will be conducted under open National competitive method using a standardized tender document. Tendering is open to all qualified and interested Tenderers under Youth and Women

1.2 Interested Eligible candidates may obtain further information from and inspect the tender document at the IEBC Procurement Anniversary Towers Fifth Floor Room No. 525 during normal working hours, Monday to Friday, 8.00a.m. - 1:00 p.m. and 2.00p.m. - 4.30p.m.

1.3 A complete set of tender documents may be obtained by interested candidates by downloading free of charge from IEBC Website at www.iebc.or.ke or www.tenders.go.ke. Tenderers who download the tender documents through the website are advised to registers at the Supply Chain Offices or email their contacts through procurement@iebc.or.ke before the closing date; to allow records and communication for any tender clarifications and addenda.

1.4 All Tenders must be accompanied by "Tender-Securing Declaration,"

1.5 The Tenderer shall chronologically serialize all pages of the tender documents submitted

1.6 Completed tender documents should be enclosed in plain sealed envelopes, marked with tender reference number and addressed to:

The Ag. Chief Executive Officer/Commission Secretary
Independent Electoral and Boundaries Commission (IEBC)
Anniversary Towers, University Way, Fifth Floor P O Box 45371-00100 Nairobi.
Website: www.iebc.or.ke

and be deposited in the Tender Box at the Fifth Floor reception, Anniversary Towers, so as to be received on or before **15th June, 2021 at 11:00 am East African Time**

1.7 Prices quoted should be net inclusive of all taxes and delivery, in Kenya Shillings and shall remain valid for 120 days from the closing date of the tender.

1.8 Tenders will be opened immediately thereafter. The tenderers' representatives may access the tender opening proceedings through electronic means via a link that will be provided to bidders hence tenderers' are encouraged to register with the procuring entity once they download the tender document and provide their email address so as to share the link with them.

1.9 Late tenders will be rejected.

Ag. Commission Secretary/CEO

PART 1 - TENDERING PROCEDURES

SECTION I: INSTRUCTIONS TO TENDERERS

A General Provisions

1. Scope of Tender

1.1 The Procuring Entity as defined in the TDS invites tenders for supply of goods and, if applicable, any Related Services incidental thereto, as specified in Section V, Supply Requirements. The name, identification, and number of lots (contracts) of this Tender Document are specified in the TDS.

1.2 Throughout this tendering document:

a) the term "in writing" means communicated in written form (e.g. by mail, e-mail, fax, including if specified in the TDS, distributed or received through the electronic-procurement system used by the Procuring Entity) with proof of receipt;

b) if the context so requires, "singular" means "plural" and vice versa;

c) "Day" means calendar day, unless otherwise specified as "Business Day". A Business Day is any day that is an official working day of the Procuring Entity. It excludes official public holidays.

2. Fraud and Corruption

2.1 The Procuring Entity requires compliance with the provisions of the Public Procurement and Asset Disposal Act, 2015, Section 62 "Declaration not to engage in corruption". The tender submitted by a person shall include a declaration that the person shall not engage in any corrupt or fraudulent practice and a declaration that the person or his or her sub-contractors are not debarred from participating in public procurement proceedings.

2.2 The Procuring Entity requires compliance with the provisions of the Competition Act 2010, regarding collusive practices in contracting. Any tenderer found to have engaged in collusive conduct shall be disqualified and criminal and/or civil sanctions may be imposed. To this effect, Tenders shall be required to complete and sign the "Certificate of Independent Tender Determination" annexed to the Form of Tender.

2.3 Unfair Competitive Advantage - Fairness and transparency in the tender process require that the firms or their Affiliates competing for a specific assignment do not derive a competitive advantage from having provided consulting services related to this tender. To that end, the Procuring Entity shall indicate in the **Data Sheet** and make available to all the firms together with this tender document all information that would in that respect give such firm any unfair competitive advantage over competing firms.

3. Eligible Tenderers

3.1 A Tenderer may be a firm that is a private entity, an individual, a state-owned enterprise or institution subject to ITT3.7, or any combination of such entities in the form of a joint venture (JV) under an existing agreement or with the intent to enter into such an agreement supported by a letter of intent. Public employees and their close relatives *(spouses, children, brothers, sisters and uncles and aunts)* are not eligible to participate in the tender.

In the case of a joint venture, all members shall be jointly and severally liable for the execution of the entire Contract in accordance with the Contract

terms. The JV shall nominate a Representative who shall have the authority to conduct all business for and on behalf of any and all the members of the JV during the Tendering process and, in the event the JV is awarded the Contract, during contract execution. The maximum number of JV members shall be specified in the **TDS.**

3.2 Public Officers of the Procuring Entity, their Spouses, Child, Parent, Brothers or Sister. Child, Parent, Brother or Sister of a Spouse their business associates or agents and firms/organizations in which they have a substantial or controlling interest shall not be eligible to tender or be awarded a contract. Public Officers are also not allowed to participate in any procurement proceedings.

3.3 A Tenderer shall not have a conflict of interest. Any Tenderer found to have a conflict of interest shall be disqualified. A Tenderer may be considered to have a conflict of interest for the purpose of this Tendering process, if the Tenderer:

a) directly or indirectly controls, is controlled by or is under common control with another Tenderer; or
b) receives or has received any direct or indirect subsidy from another Tenderer; or
c) has the same - representative or ownership as another Tenderer; or
d) has a relationship with another Tenderer, directly or through common third parties, that puts it in a position to influence the Tender of another Tenderer, or influence the decisions of the Procuring Entity regarding this Tendering process; or
e) or any of its affiliates participated as a consultant in the preparation of the design or technical specifications of the goods that are the subject of the Tender; or
f) or any of its affiliates has been hired (or is proposed to be hired) by the Procuring Entity or Procuring Entity for the Contract implementation; or
g) would be providing goods, works, or non-consulting services resulting from or directly related to consulting services for the preparation or implementation of the project specified in the TDS ITT 1.1 that it provided or were provided by any affiliate that directly or indirectly controls, is controlled by, or is under common control with that firm; or has a close business or family relationship with a professional staff of the Procuring Entity (or of the project implementing agency, who: (i) are directly or indirectly involved in the preparation of the tendering document or specifications of the Contract, and/or the Tender evaluation process of such Contract; or (ii) would be involved in the implementation or supervision of such Contract unless the conflict stemming from such relationship has been resolved in a manner acceptable to the Procuring Entity throughout the Tendering process and execution of the Contract.

3.4 A tenderer shall not be involved in corrupt, coercive, obstructive, collusive or fraudulent practice. A tenderer that is proven to have been involved in any of these practices shall be automatically disqualified.

3.5 A firm that is a Tenderer (either individually or as a JV member) shall not submit more than one Tender, except for permitted alternative Tenders. This includes participation as a subcontractor. Such participation shall result in the disqualification of all Tenders in which the firm is involved. A firm that is not a Tenderer or a JV member, may participate as a subcontractor in more than one Tender. Members of a joint venture may not also make an individual tender, be a subcontractor in a separate tender or be part of another joint venture for the purposes of the same Tender.

3.6 A Tenderer may have the nationality of any country, subject to the restrictions pursuant to ITT3.9. A Tenderer shall be deemed to have the nationality of a country if the Tenderer is constituted, incorporated or registered in and operates

in conformity with the provisions of the laws of that country, as evidenced by its articles of incorporation (or equivalent documents of constitution or association) and its registration documents, as the case may be. This criterion also shall apply to the determination of the nationality of proposed subcontractors or sub consultants for any part of the Contract including related Services.

3.7 A Tenderer that has been debarred by the PPRA from participating in public procurement shall be ineligible to tender or be awarded a contract. The list of debarred firms and individuals is available from the PPRA's website www.ppra.go.ke

3.8 Tenderers that are state-owned enterprises or institutions may be eligible to compete and be awarded a Contract(s) only if they are (i) a legal public entity of the state Government and/or public administration, (ii) financially autonomous and not receiving any significant subsidies or budget support from any public entity or Government, and (iii) operating under commercial law and vested with legal rights and liabilities similar to any commercial enterprise to enable it compete with firms in the private sector on an equal basis. Public employees and their close relatives are not eligible to participate in the tender.

3.9 Tenderers may be ineligible if their countries of origin (a) as a matter of law or official regulations, Kenya prohibits commercial relations with that country, or(b) by an act of compliance with a decision of the United Nations Security Council taken under Chapter VII of the Charter of the United Nations, Kenya prohibits any import of goods or contracting for supply of goods or services from that country, or any payments to any country, person, or entity in that country. A tenderer shall provide such documentary evidence of eligibility satisfactory to the Procuring Entity, as the Procuring Entity shall reasonably request.

3.10 Tenderers shall provide the qualification information statement that the tenderer (including all members of a joint venture and subcontractors) is not associated, or have been associated in the past, directly or indirectly, with a firm or any of its affiliates which have been engaged by the Procuring entity to provide consulting services for the preparation of the design, specifications, and other documents to be used for the procurement of the goods under this Invitation for tenders.

3.11 Where the law requires tenderers to be registered with certain authorities in Kenya, such registration requirements shall be defined in the **TDS**

3.12 The Competition Act of Kenya requires that firms wishing to tender as Joint Venture undertakings which may prevent, distort or lessen competition in provision of services are prohibited unless they are exempt in accordance with the provisions of Section 25 of the Competition Act, 2010. JVs will be required to seek for exemption from the Competition Authority. Exemption shall not be a condition for tender, but it shall be a condition of contract award and signature. A JV tenderer shall be given opportunity to seek such exemption as a condition of award and signature of contract. Application for exemption from the Competition Authority of Kenya may be accessed from the website www.cak.go.ke.

3.13 A Kenyan tenderer shall provide evidence of having fulfilled his/her tax obligations by producing a current tax clearance certificate or tax exemption certificate issued by the Kenya Revenue Authority.

4. Eligible Goods and Related Services

4.1 All the Goods and Related Services to be supplied under the Contract shall have their origin in any country that is eligible in accordance with ITT 3.9.

4.2 For purposes of this ITT, the term "goods" includes commodities, raw material, machinery, equipment, and industrial plants; and "related services" include services such as insurance, installation, training, and initial maintenance.

4.3 The term "origin" means the country where the goods have been mined, grown, cultivated, produced, manufactured or processed; or, through manufacture, processing, or assembly, another commercially recognized article results that differs substantially in its basic characteristics from its components.

4.4 A procuring entity shall ensure that the items listed below shall be sourced from Kenya and there shall be no substitutions from foreign sources. The affected items are:

a) motor vehicles, plant and equipment which are assembled in Kenya;
b) furniture, textile, foodstuffs, oil and gas, information communication technology, steel, cement, leather, agro-processed products, sanitary products, and other goods made in Kenya; or
c) goods manufactured, mined, extracted or grown in Kenya.

4.5 Any goods, works and production processes with characteristics that have been declared by the relevant national environmental protection agency or by other competent authority as harmful to human beings and to the environment shall not be eligible for procurement.

5. Sections of Tendering Document

5.1 The tendering document consist of Parts 1, 2, and 3, which include all the sections indicated below, and should be read in conjunction with any Addenda issued in accordance with ITT8.

PART : Tendering Procedures

i) Section I - Instructions to Tenderers (ITT)
ii) Section II - Tendering Data Sheet (TDS)
iii) Section III - Evaluation and Qualification Criteria
iv) Section IV - Tendering Forms

PART 2: Supply Requirements

v) Section V - Schedule of Requirements

PART 3 Contract

vi) Section VI - General Conditions of Contract (GCC)

vii) Section VII - Special Conditions of Contract (SCC)

viii) Section VIII- Contract Forms

5.2 The notice of Invitation to Tender or the notice to the prequalified Tenderers issued by the Procuring Entity is not part of the tendering document.

5.3 Unless obtained directly from the Procuring Entity, the Procuring Entity is not responsible for the completeness of the document, responses to requests for clarification, the minutes of the pre-tender meeting (if any), or addenda to the tendering document in accordance with ITT7.

5.4 The Tenderer is expected to examine all instructions, forms, terms, and specifications in the tendering document and to furnish with its Tender all information or documentation as is required by the tendering document.

6. Clarification of Tendering Document

6.1 A Tenderer requiring any clarification of the Tender Document shall contact the Procuring Entity in writing at the Procuring Entity's address specified in the **TDS** or raise its enquiries during the pre-Tender meeting if provided for in accordance with ITT 6.4. The Procuring Entity will respond in writing to any request for clarification, provided that such request is received no later than the period specified in the **TDS** prior to the deadline for submission of tenders. The Procuring Entity shall forward copies of its response to all tenderers who have acquired the Tender documents in accordance with ITT 5.3, including a description of the inquiry but without identifying its source. If so specified in the **TDS,** the Procuring Entity shall also promptly publish its response at the web page identified in the **TDS.** Should the clarification result in changes to the essential elements of the Tender Documents, the Procuring Entity shall amend the Tender Documents following the procedure under ITT 7.

6.2 The Procuring Entity shall specify in the **TDS** if a pre-tender conference will be held, when and where. The Tenderer's designated representative is invited to attend a pre-Tender meeting. The purpose of the meeting will be to clarify issues and to answer questions on any matter that may be raised at that stage.

6.3 The Tenderer is requested to submit any questions in writing, to reach the Procuring Entity not later than the period specified in the **TDS** before the meeting.

6.4 Minutes of the pre-Tender meeting, if applicable, including the text of the questions asked by Tenderers and the responses given, together with any responses prepared after the meeting, will be transmitted promptly to all Tenderers who have acquired the Tender Documents in accordance with ITT 6.3. Minutes shall not identify the source of the questions asked.

6.5 The Procuring Entity shall also promptly publish anonymized (*no names*)Minutes of the pre-Tender meeting at the web page identified **in the TDS**. Any modification to the Tender Documents that may become necessary as a result of the pre-Tender meeting shall be made by the Procuring Entity exclusively through the issue of an Addendum pursuant to ITT 7 and not through the minutes of the pre-Tender meeting. Nonattendance at the pre- Tender meeting will not be a cause for disqualification of a Tenderer.

7. Amendment of Tendering Document

7.1 At any time prior to the deadline for submission of Tenders, the Procuring Entity may amend the tendering document by issuing addenda.

7.2 Any addendum issued shall be part of the tendering document and shall be communicated in writing to all who have obtained the tender document from the Procuring Entity in accordance with ITT 6.3. The Procuring Entity shall also promptly publish the addendum on the Procuring Entity's web page in accordance with ITT 7.1.

7.3 To give prospective Tenderers reasonable time in which to take an addendum into account in preparing their Tenders, the Procuring Entity may, at its discretion, extend the deadline for the submission of Tenders, pursuant to ITT 21.2.

C. Preparation of Tenders

8. Cost of Tendering

8.1 The Tenderer shall bear all costs associated with the preparation and submission of its Tender, and the Procuring Entity shall not be responsible or liable for those costs, regardless of the conduct or outcome of the Tendering process.

9. Language of Tender

9.1 The Tender, as well as all correspondence and documents relating to the Tender exchanged by the Tenderer and the Procuring Entity, shall be written in English Language. Supporting documents and printed literature that are part of the Tender may be in another language provided they are accompanied by an accurate translation of the relevant passages into the English Language, in which case, for purposes of interpretation of the Tender, such translation shall govern.

10. Documents Comprising the Tender

10.1 The Tender shall comprise the following:

a) Form of Tender prepared in accordance with ITT11;

b) Price Schedules: completed in accordance with ITT 11 and ITT 13;

c) Tender Security or Tender-Securing Declaration, in accordance with ITT 18.1;

d) Alternative Tender: if permissible, in accordance with ITT12;

e) Authorization: written confirmation authorizing the signatory of the Tender to commit the Tenderer, in accordance with ITT19.3;

f) Qualifications: documentary evidence in accordance with ITT 16.2 establishing the Tenderer qualifications to perform the Contract if its Tender is accepted;

g) Tenderer Eligibility: documentary evidence in accordance with ITT16.1 establishing the Tenderer eligibility to tender;

h) Eligibility of Goods and Related Services: documentary evidence in accordance with ITT 15, establishing the eligibility of the Goods and Related Services to be supplied by the Tenderer;

i) Conformity: documentary evidence in accordance with ITT15.2 that the Goods and Related Services conform to the tender document; and

j) any other document required in the TDS.

10.2 In addition to the requirements under ITT 10.1, Tenders submitted by a JV shall include a copy of the Joint Venture Agreement entered into by all members. Alternatively, a letter of intent to execute a Joint Venture Agreement in the event of a successful Tender shall be signed by all members and submitted with the Tender, together with a copy of the proposed Agreement.

10.3 The Tenderer shall furnish in the Form of Tender information on commissions gratuities, and fees, if any, paid or to be paid to agents or any other party relating to this Tender.

11. Form of Tender and Price Schedules

11.1 The Form of Tender and Price Schedules shall be prepared using the relevant forms furnished in Section IV, Tendering Forms. The forms must be completed without any alterations to the text. All blank spaces shall be filled in with the information requested. The Tenderer shall chronologically serialise pages of all tender documents submitted.

12. Alternative Tenders

12.1 Unless otherwise specified **in the TDS,** alternative Tenders shall not be considered.

13. Tender Prices and discounts

13.1 The prices quoted by the Tenderer in the Form of Tender and in the Price, Schedules shall conform to the requirements specified below.

13.2 All lots (contracts) and items must be listed and priced separately in the Price Schedules.

13.3 The price to be quoted in the Form of Tender in accordance with ITT10.1 shall be the total price of the Tender, including any discounts offered.

13.4 The Tenderer shall quote any discounts and indicate the methodology for their application in the form of tender. Conditional discounts will be rejected.

13.5 Prices quoted by the Tenderer shall be fixed during the performance of the Contract and not subject to variation on any account, unless otherwise specified **in the TDS.** A Tender submitted with an adjustable price quotation shall be treated as non-responsive and shall be rejected, pursuant to ITT 28. However, if in accordance with **the TDS**, prices quoted by the Tenderer shall be subject to adjustment during the performance of the Contract, a Tender submitted with a fixed price quotation shall not be rejected, but the price adjustment shall be treated as zero.

13.6 If specified in ITT 1.1, Tenders are being invited for individual lots (contracts) or for any combination of lots (packages). Unless otherwise specified **in the TDS,** prices quoted shall correspond to 100 % of the items specified for each lot and to 100% of the quantities specified for each item of a lot. Tenderers wishing to offer discounts for the award of more than one Contract shall specify in their Tender the price reductions applicable to each package, or alternatively, to individual Contracts within the package. Discounts shall be submitted in accordance with ITT 13.4 provided the Tenders for all lots (contracts) are opened at the same time.

13.7 The terms EXW, CIP, CIF, DDP and other similar terms shall be governed by the rules prescribed in the current edition of Incoterms, published by the International Chamber of Commerce.

13.8 Prices shall be quoted as specified in each Price Schedule included in Section IV, Tendering Forms. The disaggregation of price components is required solely for the purpose of facilitating the comparison of Tenders by the Procuring Entity. This shall not in any way limit the Procuring Entity's right to contract on any of the terms offered. In quoting prices, the Tenderer shall be free to use transportation through carriers registered in any eligible country. Similarly, the Tenderer may obtain insurance services from any eligible country in accordance with ITT 3.6, Eligible Tenders. Prices shall be entered in the following manner:

a) For Goods manufactured in Kenya:

I) the price of the Goods quoted EXW (ex-works, ex-factory, ex warehouse, ex showroom, or off-the- shelf, as applicable) final destination point indicated in the **TDS**, including all customs duties and sales and other taxes already paid or payable on the components and raw material used in the manufacture or assembly of the Goods;

ii) any sales tax and other taxes which will be payable in Kenya on the Goods if the Contract is awarded to the Tenderer; and

iii) the price for inland transportation, insurance, and other local services required to convey the Goods to their final destination specified **in the TDS.**

b) For Goods manufactured outside Kenya, to be imported:

i) the price of the Goods, quoted CIP named place of destination, in Kenya, as specified **in the TDS;**

ii) the price for inland transportation, insurance, and other local services required to convey the Goods from the named place of destination to their final destination specified **in the TDS;**

c) For Goods manufactured outside Kenya, already imported:

i) the price of the Goods, including the original import value of the Goods; plus, any mark-up (or rebate); plus, any other related local cost, and custom duties and other import taxes already paid or to be paid on the Goods already imported;

ii) the custom duties and other import taxes already paid (need to be supported with documentary evidence) or to be paid on the Goods already imported;

iii) any sales and other taxes levied in Kenya which will be payable on the Goods if the Contract is awarded to the Tenderer; and

iv) the price for inland transportation, insurance, and other local services required to convey the Goods from the named place of destination to their final destination (Project Site) specified **in the TDS.**

d) for Related Services, other than inland transportation and other services required to convey the Goods to their final destination, whenever such Related Services are specified in the Schedule of Requirements, the price of each item comprising the Related Services (inclusive of any applicable taxes).

14. Currencies of Tender and Payment

14.1 The currency (ies) of the Tender, the currency (ies) of award and the currency (ies) of contract payments shall be the same.

14.2 The Tenderer shall quote in Kenya shillings. If allowed in the **TDS**, the Tenderer may express the Tender price in any currency, provided it shall use no more than two foreign currencies in addition to the Kenya Shilling.

14.3 The rates of exchange to be used by the Tenderer shall be based on the exchange rates provided by the Central Bank of Kenya on the date 30 days prior to the actual date of tender opening.

15. Documents Establishing the Eligibility and Conformity of the Goods and Related Services

15.1 To establish the eligibility of the Goods and Related Services in accordance with ITT 15, Tenderers shall complete the country of origin declarations in the Price Schedule Forms, included in Section IV, Tendering Forms.

15.2 To establish the conformity of the Goods and Related Services to the tendering document, the Tenderer shall furnish as part of its Tender the documentary evidence that the Goods conform to the technical specifications and standards specified in Section VII, Schedule of Requirements.

15.3 The documentary evidence may be in the form of literature, drawings or data, and shall consist of a detailed item by item description of the essential technical

and performance characteristics of the Goods and Related Services, demonstrating substantial responsiveness of the Goods and Related Services to the technical specification, and if applicable, a statement of deviations and exceptions to the provisions of the Section VII, Schedule of Requirements.

15.4 The Tenderer shall also furnish a list giving full particulars, including available sources and current prices of spare parts, special tools, etc., necessary for the proper and continuing functioning of the Goods during the period **specified in the TDS** following commencement of the use of the goods by the Procuring Entity.

15.5 Standards for workmanship, process, material, and equipment, as well as references to brand names or catalogue numbers specified by the Procuring Entity in the Schedule of Requirements, are intended to be descriptive only and not restrictive. The Tenderer may offer other standards of quality, brand names, and/or catalogue numbers, provided that it demonstrates, to the Procuring Entity's satisfaction, that the substitutions ensure substantial equivalence or are superior to those specified in the Section VII, Schedule of Requirements.

16. Documents Establishing the Eligibility and Qualifications of the Tenderer

16.1 To establish Tenderer eligibility in accordance with ITT 4, Tenderers shall complete the Form of Tender, included in Section IV, Tendering Forms.

16.2 The documentary evidence of the Tenderer qualifications to perform the Contract if its Tender is accepted shall establish to the Procuring Entity's satisfaction:

a) that, if required **in the TDS**, a Tenderer that does not manufacture or produce the Goods it offers to supply shall submit the Manufacturer's Authorization using the form included in Section IV, Tendering Forms to demonstrate that it has been duly authorized by the manufacturer or producer of the Goods to supply these Goods in Kenya;

b) that, if required **in the TDS**, in case of a Tenderer not doing business within the Kenya, the Tenderer is or will be (if awarded the Contract) represented by an Agent in the country equipped and able to carry out the Supplier's maintenance, repair and spare parts-stocking obligations prescribed in the Conditions of Contract and/or Technical Specifications; and

c) that the Tenderer meets each of the qualification criterion specified in Section III, Evaluation and Qualification Criteria.

17. Period of Validity of Tenders

17.1 Tenders shall remain valid for the Tender Validity period specified **in the TDS**. The Tender Validity period starts from the date fixed for the Tender submission deadline (as prescribed by the Procuring Entity in accordance with ITT 21.1). A Tender valid for a shorter period shall be rejected by the Procuring Entity as non-responsive.

17.2 In exceptional circumstances, prior to the expiration of the Tender validity period, the Procuring Entity may request Tenderers to extend the period of validity of their Tenders. The request and the responses shall be made in writing. If a Tender Security is requested in accordance with ITT 18, it shall also be extended for a corresponding period. A Tenderer may refuse the request without forfeiting its Tender Security. A Tenderer granting the request shall not be required or permitted to modify its Tender, except as provided in ITT 17.3.

17.3 If the award is delayed by a period exceeding the number of days to be specified in the **TDS** days beyond the expiry of the initial tender validity period,

the Contract price shall be determined as follows:

a) in the case of **fixed price** contracts, the Contract price shall be the tender price adjusted by the factor specified **in the TDS**;
b) in the case of **adjustable price** contracts, no adjustment shall be made; or in any case, tender evaluation shall be based on the tender price without taking into consideration the applicable correction from those indicated above.

18. Tender Security

18.1 The Tenderer shall furnish as part of its Tender, either a Tender-Securing Declaration or a Tender Security, as specified **in the TDS,** in original form and, in the case of a Tender Security**,** in the amount and currency specified **in the TDS.**

18.2 A Tender Securing Declaration shall use the form included in Section IV, Tendering Forms.

18.3 If a Tender Security is specified pursuant to ITT 18.1, the Tender Security shall be a demand guarantee in any of the following forms at the Tenderer option:

i) cash;
ii) a bank guarantee;
iii) a guarantee by an insurance company registered and licensed by the Insurance Regulatory Authority listed by the Authority; or
iv) a letter of credit; or
v) guarantee by a deposit taking micro-finance institution, Sacco society, the Youth Enterprise Development Fund or the Women Enterprise Fund.

18.4 If an unconditional guarantee is issued by a non-Bank financial institution located outside Kenya, the issuing non-Bank financial institution shall have a correspondent financial institution located in Kenya to make it enforceable unless the Procuring Entity has agreed in writing, prior to Tender submission, that a correspondent financial institution is not required. In the case of a bank guarantee, the Tender Security shall be submitted either using the Tender Security Form included in Section IV, Tendering Forms, or in another substantially similar format approved by the Procuring Entity prior to Tender submission. The Tender Security shall be valid for thirty
(30) days beyond the original validity period of the Tender, or beyond any period of extension if requested under ITT 17.2.

18.5 If a Tender Security is specified pursuant to ITT 18.1, any Tender not accompanied by a substantially responsive Tender Security shall be rejected by the Procuring Entity as non-responsive.

18.6 If a Tender Security is specified pursuant to ITT 18.1, the Tender Security of unsuccessful Tenderers shall be returned as promptly as possible upon the successful Tenderer signing the Contract and furnishing the Performance Security pursuant to ITT 46.The Procuring Entity shall also promptly return the tender security to the tenderers where the procurement proceedings are terminated, all tenders were determined non-responsive or a bidder declines to extend tender validity period.

18.7 The Tender Security of the successful Tenderer shall be returned as promptly as possible once the successful Tenderer has signed the Contract and furnished the required Performance Security.

18.8 The Tender Security may be forfeited or the Tender Securing Declaration executed:

a) if a Tenderer withdraws its Tender during the period of Tender validity specified by the Tenderer in the Form of Tender, or any extension thereto provided by the Tenderer; or
b) if the successful Tenderer fails to:

i) sign the Contract in accordance with ITT 45; or
ii) furnish a Performance Security in accordance with ITT 46.

18.9 Where tender securing declaration is executed, the Procuring Entity shall recommend to the PPRA that PPRA debars the Tenderer from participating in public procurement as provided in the law.

18.10 The Tender Security or Tender- Securing Declaration of a JV must be in the name of the JV that submits the Tender. If the JV has not been legally constituted into a legally enforceable JV at the time of Tendering, the Tender Security or Tender-Securing Declaration shall be in the names of all future members as named in the letter of intent referred to in ITT3.1 and ITT 10.2.

18.11 A tenderer shall not issue a tender security to guarantee itself.

19. Format and Signing of Tender

19.1 The Tenderer shall prepare one original of the documents comprising the Tender as described in ITT 11 and clearly mark it "ORIGINAL." Alternative Tenders, if permitted in accordance with ITT 12, shall be clearly marked "ALTERNATIVE." In addition, the Tenderer shall submit copies of the Tender, in the number **specified in the TDS** and clearly mark them "COPY." In the event of any discrepancy between the original and the copies, the original shall prevail.

19.2 Tenderers shall mark as "CONFIDENTIAL" information in their Tenders which is confidential to their business. This may include proprietary information, trade secrets, or commercial or financially sensitive information.

19.3 The original and all copies of the Tender shall be typed or written in indelible ink and shall be signed by a person duly authorized to sign on behalf of the Tenderer. This authorization shall consist of a written confirmation **as specified in the TDS** and shall be attached to the Tender. The name and position held by each person signing the authorization must be typed or printed below the signature. All pages of the Tender where entries or amendments have been made shall be signed or initialled by the person signing the Tender.

19.4 In case the Tenderer is a JV, the Tender shall be signed by an authorized representative of the JV on behalf of the JV, and so as to be legally binding on all the members as evidenced by a power of attorney signed by each members' legally authorized representatives.

19.5 Any inter-lineation, erasures, or overwriting shall be valid only if they are signed or initialled by the person signing the Tender.

D. Submission and Opening of Tenders

20 Sealing and Marking of Tenders

20.1 Depending on the sizes or quantities or weight of the tender documents, a tenderer may use an envelope, package or container. The Tenderer shall deliver the Tender in a single sealed envelope, or in a single sealed package, or in a single sealed container bearing the name and Reference number of the Tender, addressed to the Procuring Entity and a warning not to open before the time and date for Tender opening date. Within the single envelope, package or container, the Tenderer shall place the following separate, sealed envelopes:

a) in an envelope or package or container marked "ORIGINAL", all documents comprising the Tender, as described in ITT 11; and
b) in an envelope or package or container marked "COPIES", all required copies of the Tender; and

c) if alternative Tenders are permitted in accordance with ITT 12, and if relevant:
   i) in an envelope or package or container marked "ORIGINAL – ALTERNATIVE TENDER", the alternative Tender; and
   ii) in the envelope or package or container marked "COPIES- ALTERNATIVE TENDER", all required copies of the alternative Tender.

20.2 The inner envelopes or packages or containers shall:
a) bear the name and address of the Procuring Entity.
b) bear the name and address of the Tenderer; and
c) bear the name and Reference number of the Tender.

20.3 Where a tender package or container cannot fit in the tender box, the procuring entity shall:
a) Specify in the **TDS** where such documents should be received.
b) maintain a record of tenders received and issue acknowledgement receipt note to each tenderer specifying time and date of receipt.
c) Ensure all tenders received are handed over to the tender opening committee for opening at the specified opening place and time.

20.4 If an envelope or package or container is not sealed and marked as required, the *Procuring Entity* will assume no responsibility for the misplacement or premature opening of the Tender. Tenders misplaced or opened prematurely will not be accepted.

21. Deadline for Submission of Tenders

21.1 Tenders must be received by the Procuring Entity at the address and no later than the date and time specified **in the TDS.** When so specified **in the TDS**, Tenderers shall have the option of submitting their Tenders electronically. Tenderers submitting Tenders electronically shall follow the electronic Tender submission procedures **specified in the TDS**.

21.2 The Procuring Entity may, at its discretion, extend the deadline for the submission of Tenders by amending the tendering document in accordance with ITT7, in which case all rights and obligations of the Procuring Entity and Tenderers previously subject to the deadline shall thereafter be subject to the deadline as extended.

22. Late Tenders

22.1 The Procuring Entity shall not consider any Tender that arrives after the deadline for submission of Tenders. Any Tender received by the Procuring Entity after the deadline for submission of Tenders shall be declared late, rejected, and returned unopened to the Tenderer.

23. Withdrawal, Substitution, and Modification of Tenders

23.1 A Tenderer may withdraw, substitute, or modify its Tender after it has been submitted by sending a written notice, duly signed by an authorized representative, and shall include a copy of the authorization (the power of attorney) in accordance with ITT19.3, (except that withdrawal notices do not require copies). The corresponding substitution or modification of the Tender must accompany the respective written notice. All notices must be:
a) prepared and submitted in accordance with ITT 20 and 21 (except that withdrawal notices do not require copies), and in addition, the respective envelopes shall be clearly marked "WITHDRAWAL," "SUBSTITUTION," or "MODIFICATION;" and
b) received by the Procuring Entity prior to the deadline prescribed for submission of Tenders, in accordance with ITT 22.

23.3 Tenders requested to be withdrawn in accordance with ITT 23.1 shall be returned unopened to the Tenderers.

23.4 No Tender may be withdrawn, substituted, or modified in the interval between the deadline for submission of Tenders and the expiration of the period of Tender validity specified by the Tenderer on the Form of Tender or any extension thereof.

24. Tender Opening

24.1 Except as in the cases specified in ITT 23, the Procuring Entity shall, at the Tender opening, publicly open and read out all Tenders received by the deadline at the date, time and place specified **in the TDS** in the presence of Tenderers' designated representatives who choose to attend, including to attend any specific electronic tender opening procedures if electronic tendering is permitted in accordance with ITT 21.1, shall be as specified **in the TDS.**

24.2 First, envelopes marked "WITHDRAWAL" shall be opened and read out and the envelope with the corresponding Tender shall not be opened, but returned to the Tenderer. If the withdrawal envelope does not contain a copy of the "power of attorney" confirming the signature as a person duly authorized to sign on behalf of the Tenderer, the corresponding Tender will be opened. No Tender withdrawal shall be permitted unless the corresponding withdrawal notice contains a valid authorization to request the withdrawal and is read out at Tender opening.

24.3 Next, envelopes marked "SUBSTITUTION" shall be opened and read out and exchanged with the corresponding Tender being substituted, and the substituted Tender shall not be opened, but returned to the Tenderer. No Tender substitution shall be permitted unless the corresponding substitution notice contains a valid authorization to request the substitution and is read out at Tender opening.

24.4 Next, envelopes marked "MODIFICATION" shall be opened and read out with the corresponding Tender. No Tender modification shall be permitted unless the corresponding modification notice contains a valid authorization to request the modification and is read out at Tender opening.

24.5 Next, all remaining envelopes shall be opened one at a time, reading out: the name of the Tenderer and whether there is a modification; the total Tender Prices, per lot (contract) if applicable, including any discounts and alternative Tenders; the presence or absence of a Tender Security, if required; and any other details as the Procuring Entity may consider appropriate.

24.6 Only Tenders, alternative Tenders and discounts that are opened and read out at Tender opening shall be considered further for evaluation. The Form of Tender and pages of the Bills of Quantities are to be initialed by the members of the tender opening committee attending the opening. The number of representatives of the Procuring Entity to sign shall be specified in the **TDS.**

24.7 The Procuring Entity shall neither discuss the merits of any Tender nor reject any Tender (except for late Tenders, in accordance with ITT 22.1).

24.8 The Procuring Entity shall prepare a record of the Tender opening that shall include, as a minimum:

a) the name of the Tenderer and whether there is a withdrawal, substitution, or modification;
b) the Tender Price, per lot (contract) if applicable, including any discounts;
c) any alternative Tenders;
d) the presence or absence of a Tender Security or Tender-Securing Declaration, if one was required;
e) number of pages of each tender document submitted.

24.9 The Tenderers' representatives who are present shall be requested to sign the record. The omission of a Tenderer signature on the record shall not invalidate the contents and effect of the record. A copy of the tender opening register shall be issued to a Tenderer upon request.

E. Evaluation and Comparison of Tenders

25. Confidentiality

25.1 Information relating to the evaluation of Tenders and recommendation of contract award, shall not be disclosed to Tenderers or any other persons not officially concerned with the tendering process until the information on Intention to Award the Contract is transmitted to all Tenderers in accordance with ITT 41.

25.2 Any effort by a Tenderer to influence the Procuring Entity in the evaluation or contract award decisions may result in the rejection of its Tender.

25.3 Notwithstanding ITT 25.2, from the time of Tender opening to the time of Contract Award, if any Tenderer wishes to contact the Procuring Entity on any matter related to the Tendering process, it should do so in writing.

26. Clarification of Tenders

26.1 To assist in the examination, evaluation, comparison of the Tenders, and qualification of the Tenderers, the Procuring Entity may, at its discretion, ask any Tenderer for a clarification of its Tender. Any clarification submitted by a Tenderer in respect to its Tender and that is not in response to a request by the Procuring Entity shall not be considered. The Procuring Entity's request for clarification and the response shall be in writing. No change, including any voluntary increase or decrease, in the prices or substance of the Tender shall be sought, offered, or permitted except to confirm the correction of arithmetic errors discovered by the Procuring Entity in the Evaluation of the Tenders, in accordance with ITT 30.

If a Tenderer does not provide clarifications of its Tender by the date and time set in the Procuring Entity's request for clarification, its Tender may be rejected.

27. Deviations, Reservations, and Omissions

27.1 During the evaluation of Tenders, the following definitions apply:

a) "Deviation" is a departure from he requirements specified in the Tendering document;

b) "Reservation" is the setting of limiting conditions or withholding from complete acceptance of the requirements specified in the tendering document; and

c) "Omission" is the failure to submit part or all of the information or documentation required in the tendering document.

28. Determination of Responsiveness

28.1 The Procuring Entity's determination of a Tender's responsiveness is to be based on the contents of the Tender itself, as defined in ITT28.2.

28. A substantially responsive Tender is one that meets the requirements of the tendering document without material deviation, reservation, or omission. A material deviation, reservation, or omission is one that:

a) if accepted, would:

i) affect in any substantial way the scope, quality, or performance of the Goods and Related Services specified in the Contract; or

ii) limit in any substantial way, inconsistent with the tendering document, the Procuring Entity's rights or the Tenderer obligations under the Contract; or

b) if rectified, would unfairly affect the competitive position of other Tenderers presenting substantially responsive Tenders.

28.2 The Procuring Entity shall examine the technical aspects of the Tender submitted in accordance with ITT 15 and ITT 16, in particular, to confirm that all requirements of Section VII, Schedule of Requirements have been met without any material deviation or reservation, or omission.

28.3 If a Tender is not substantially responsive to the requirements of tendering document, it shall be rejected by the Procuring Entity and may not subsequently be made responsive by correction of the material deviation, reservation, or omission.

29. Non-conformities, Errors and Omissions

29.1 Provided that a Tender is substantially responsive, the Procuring Entity may waive any non-conformities in the Tender.

29.2 Provided that a Tender is substantially responsive, the Procuring Entity may request that the Tenderer submit the necessary information or documentation, within a reasonable period of time, to rectify nonmaterial non- conformities or omissions in the Tender related to documentation requirements. Such omission shall not be related to any aspect of the price of the Tender. Failure of the Tenderer to comply with the request may result in the rejection of its Tender.

29.3 Provided that a Tender is substantially responsive, the Procuring Entity shall rectify quantifiable nonmaterial non-conformities related to the Tender Price. To this effect, the Tender Price shall be adjusted, for comparison purposes only, to reflect the price of a missing or non-conforming item or component in the manner specified **in the TDS**. The adjustment shall be based on the ***average*** price of the item or component as quoted in other substantially responsive Tenders. If the price of the item or component cannot be derived from the price of other substantially responsive Tenders, the Procuring Entity shall use its best estimate.

30. Arithmetical Errors

30.1 The tender sum as submitted and read out during the tender opening shall be absolute and final and shall not be the subject of correction, adjustment or amendment in any way by any person or entity.

30.2 Provided that the Tender is substantially responsive, the Procuring Entity shall handle errors on the following basis:

a) Any error detected if considered a major deviation that affects the substance of the tender, shall lead to disqualification of the tender as non-responsive .

b) Any errors in the submitted tender arising from a miscalculation of unit price, quantity, subtotal and total bid price shall be considered as a major deviation that affects the substance of the tender and shall lead to disqualification of the tender as non-responsive. and

c) if there is a discrepancy between words and figures, the amount in words shall prevail.

30.2 Tenderers shall be notified of any error detected in their bid during the notification of a ward.

31. Conversion to Single Currency

31.1 For evaluation and comparison purposes, the currency(ies) of the Tender shall be converted in a single currency as specified **in the TDS.**

32. Margin of Preference and Reservations

32.1 A margin of preference may be allowed on locally manufactured goods only when the contract is open to international tendering, where the tender is likely to attract foreign goods and where the contract exceeds the threshold specified in the Regulations.

32.2 For purposes of granting a margin of preference on locally manufactured goods under international competitive tendering, a procuring entity shall not subject the items listed below to international tender and hence no margin of preference shall be allowed. The affected items are:

a) motor vehicles, plant and equipment which are assembled in Kenya;

b) furniture, textile, foodstuffs, oil and gas, information communication technology, steel, cement, leather agro-processing, sanitary products, and other goods made in Kenya; or

c) goods manufactured, mined, extracted or grown in Kenya.

32.3 A margin of preference shall not be allowed unless it is specified so in the **TDS**.

32.4 Contracts procured on basis of international competitive tendering shall not be subject to reservations to specific groups s as provided in ITT 32.5.

32.5 Where it is intended to reserve a contract to a specific group of businesses (these groups are Small and Medium Enterprises, Women Enterprises, Youth Enterprises and Enterprises of persons living with disability, as the case may be), and who are appropriately registered as such by the authority to be specified in the **TDS**, a procuring entity shall ensure that the invitation to tender specifically indicates that only businesses or firms belonging to the specified group are eligible to tender as specified in the **TDS**. No tender shall be reserved to more than one group. If not so stated in the Tender documents, the invitation to tender will be open to all interested tenderers.

33. Evaluation of Tenders

33.1 The Procuring Entity shall use the criteria and methodologies listed in this ITT and Section III, Evaluation and Qualification criteria. No other evaluation criteria or methodologies shall be permitted. By applying the criteria and methodologies, the Procuring Entity shall determine the Lowest Evaluated Tender. This is the Tender of the Tenderer that meets the qualification criteria and whose Tender has been determined to be:

a) substantially responsive to the tender documents; and

b) the lowest evaluated price.

33.2 Price evaluation will be done for Items or Lots (contracts), as specified **in the TDS;** and the Tender Price as quoted in accordance with ITT 14. To evaluate a Tender, the Procuring Entity shall consider the following:

a) price adjustment due to unconditional discounts offered in accordance with ITT 13.4;

b) converting the amount resulting from applying (a) and (b) above, if relevant, to a single currency in accordance with ITT 31;
c) price adjustment due to quantifiable nonmaterial non-conformities in accordance with ITT 29.3; and
d) any additional evaluation factors specified **in the TDS** and Section III, Evaluation and Qualification Criteria.

33.3 The estimated effect of the price adjustment provisions of the Conditions of Contract, applied over the period of execution of the Contract, shall not be considered in Tender evaluation.

33.4 Where the tender involves multiple lots or contracts, the tenderer will be allowed to tender for one or more lots (contracts). Each lot or contract will be evaluated in accordance with ITT 33.2. The methodology to determine the lowest evaluated tenderer or tenderers based one lot (contract) or based on a combination of lots (contracts), will be specified in Section III, Evaluation and Qualification Criteria. In the case of multiple lots or contracts, tenderer will be will be required to prepare the Eligibility and Qualification Criteria Form for each Lot.

33.5 The Procuring Entity's evaluation of a Tender will include and consider:
a) in the case of Goods manufactured in Kenya, sales and other similar taxes, which will be payable on the goods if a contract is awarded to the Tenderer;
b) in the case of Goods manufactured outside Kenya, already imported or to be imported, customs duties and other import taxes levied on the imported Good, sales and other similar taxes, which will be payable on the Goods if the contract is awarded to the Tenderer;

33.6 The Procuring Entity's evaluation of a Tender may require the consideration of other factors, in addition to the Tender Price quoted in accordance with ITT 14. These factors may be related to the characteristics, performance, and terms and conditions of purchase of the Goods and Related Services. The effect of the factors selected, if any, shall be expressed in monetary terms to facilitate comparison of Tenders, unless otherwise specified in the **TDS** from amongst those set out in Section III, Evaluation and Qualification Criteria. The additional criteria and methodologies to be used shall be as specified in ITT 33.2(d).

34. Comparison of Tenders

34.1 The Procuring Entity shall compare the evaluated costs of all substantially responsive Tenders established in accordance with ITT 33.2 to determine the Tender that has the lowest evaluated cost. The comparison shall be on the basis of total cost (place of final destination) prices for all goods and all prices, plus cost of inland transportation and insurance to place of destination, for goods manufactured within the Kenya, together with prices for any required installation, training, commissioning and other services.

35. Abnormally Low Tenders

35.1 An Abnormally Low Tender is one where the Tender price, in combination with other constituent elements of the Tender, appears unreasonably low to the extent that the Tender price raises material concerns with the Procuring Entity as to the capability of the Tenderer to perform the Contract for the offered Tender price.

35.2 In the event of identification of a potentially Abnormally Low Tender by the evaluation committee, the Procuring Entity shall seek written clarification from the Tenderer, including a detailed price analyses of its Tender price in relation to the subject matter of the contract, scope, delivery schedule, allocation of risks and responsibilities and any other requirements of the tendering document.

35.3 After evaluation of the price analysis, in the event that the Procuring Entity determines that the Tenderer has failed to demonstrate its capability to perform the contract for the offered Tender price, the Procuring Entity shall reject the Tender.

36. Abnormally High Tenders

An abnormally high price is one where the tender price, in combination with other constituent elements of the

Tender, appears unreasonably too high to the extent that the Procuring Entity is concerned that it (the Procuring Entity) may not be getting value for money or it may be paying too high a price for the contract compared with market prices or that genuine competition between Tenderers is compromised.

36.4 In case of an abnormally high tender price, the Procuring Entity shall make a survey of the market prices, check if the estimated cost of the contract is correct and review the Tender Documents to check if the specifications, scope of work and conditions of contract are contributory to the abnormally high tenders. The Procuring Entity may also seek written clarification from the tenderer on the reason for the high tender price. The Procuring Entity shall proceed as follows:

i) If the tender price is abnormally high based on wrong estimated cost of the contract, the Procuring Entity may accept or not accept the tender depending on the Procuring Entity's budget considerations.

ii) If specifications, scope of work and/or conditions of contract are contributory to the abnormally high tender prices, the Procuring Entity shall reject all tenders and may retender for the contract based on revised estimates, specifications, scope of work and conditions of contract, as the case may be.

36.5 If the Procuring Entity determines that the Tender Price is abnormally too high because genuine competition between tenderers is compromised (*often due to collusion, corruption or other manipulations*), the Procuring Entity shall reject all Tenders and shall institute or cause relevant Government Agencies to institute an investigation on the cause of the compromise, before retendering.

37. Post Qualification of the Tenderer

37.1 The Procuring Entity shall determine, to its satisfaction, whether the eligible Tenderer that is selected as having submitted the lowest evaluated cost and substantially responsive Tender, meets the qualifying criteria specified in Section III, Evaluation and Qualification Criteria.

37.2 The determination shall be based upon an examination of the documentary evidence of the Tenderer qualifications submitted by the Tenderer, pursuant to ITT 15 and 16. The determination shall not take into consideration the qualifications of other firms such as the Tenderer subsidiaries, parent entities, affiliates, subcontractors (other than specialized subcontractors if permitted in the tendering document), or any other firm(s) different from the Tenderer.

37.3 An affirmative determination shall be a prerequisite for award of the Contract to the Tenderer. A negative determination shall result in disqualification of the Tender, in which event the Procuring Entity shall proceed to the Tenderer who offers a substantially responsive Tender with the next lowest evaluated cost to make a similar determination of that Tenderer qualifications to perform satisfactorily.

38. Lowest Evaluated Tender

38.1 Having compared the evaluated prices of Tenders, the Procuring Entity shall determine the Lowest Evaluated Tender. The Lowest Evaluated Tender is the Tender of the Tenderer that meets the Qualification Criteria and whose Tender has been determined to be:

a) Most responsive to the Tender document; and
b) the lowest evaluated price.

39. Procuring Entity's Right to Accept Any Tender, and to Reject Any or All Tenders.

39.1 The Procuring Entity reserves the right to accept or reject any Tender, and to annul the Tendering process and reject all Tenders at any time prior to notification Award, without thereby incurring any liability to Tenderers. In case of annulment, all Tenderers shall be notified with reasons and all Tenders submitted and specifically, tender securities, shall be promptly returned to the Tenderers.

F. Award of Contract

40. Award Criteria

The Procuring Entity shall award the Contract to the successful tenderer whose tender has been determined to be the Lowest Evaluated Tender in accordance with procedures in Section 3: Evaluation and Qualification Criteria.

41. Notice of Intention to enter into a Contract

Upon award of the contract and Prior to the expiry of the Tender Validity Period the Procuring Entity shall issue a Notification of Intention to Enter into a Contract / Notification of award to all tenderers which shall contain, at a minimum, the following information:

a) the name and address of the Tenderer submitting the successful tender;

b) the Contract price of the successful tender;

c) a statement of the reason(s) the tender of the unsuccessful tenderer to whom the letter is addressed was unsuccessful, unless the price information in (c) above already reveals the reason;

d) the expiry date of the Standstill Period; and

e) instructions on how to request a debriefing and/or submit a complaint during the standstill period;

42. Standstill Period

42.1 The Contract shall not be awarded earlier than the expiry of a Standstill Period of 14 days to allow any dissatisfied candidate to launch a complaint. Where only one Tender is submitted, the Standstill Period shall not apply.

42.2 Where standstill period applies, it shall commence when the Procuring Entity has transmitted to each Tenderer the Notification of Intention to Enter into a Contract to the successful Tenderer.

43. Debriefing by the Procuring Entity

43.1 On receipt of the Procuring Entity's Notification of Intention to Enter into a Contract referred to in ITT 41, an unsuccessful tenderer may make a written request to the Procuring Entity for a debriefing on specific issues or concerns regarding their tender. The Procuring Entity shall provide the debriefing within five days of receipt of the request.

43.2 Debriefings of unsuccessful Tenderers may be done in writing or verbally. The Tenderer shall bear its own costs of attending such a debriefing meeting.

44. Letter of Award

Prior to the expiry of the Tender Validity Period and upon expiry of the Standstill Period specified in ITT 42, upon addressing a complaint that has been filed within the Standstill Period, the Procuring Entity shall transmit the Letter of Award to the successful Tenderer. The letter of award shall request the successful tenderer to furnish the Performance Security within 21days of the date of the letter.

45. Signing of Contract

45.1 Upon the expiry of the fourteen days of the Notification of Intention to enter into contract and upon the parties meeting their respective statutory requirements, the Procuring Entity shall send the successful Tenderer the Contract Agreement.

45.2 Within fourteen (14) days of receipt of the Contract Agreement, the successful Tenderer shall sign, date, and return it to the Procuring Entity.

45.3 The written contract shall be entered into within the period specified in the notification of award and before expiry of the tender validity period.

46. Performance Security

46.1 Within twenty-one (21) days of the receipt of Letter of Acceptance from the Procuring Entity, the successful Tenderer, if required, shall furnish the Performance Security in accordance with the GCC 18, using for that purpose the Performance Security Form included in Section X, Contract Forms. If the Performance Security furnished by the successful Tenderer is in the form of a bond, it shall be issued by a bonding or insurance company that has been determined by the successful Tenderer to be acceptable to the Procuring Entity. A foreign institution providing a bond shall have a correspondent financial institution located in Kenya, unless the Procuring Entity has agreed in writing that a correspondent financial institution is not required.

46.2 Failure of the successful Tenderer to submit the above-mentioned Performance Security or sign the Contract shall constitute sufficient grounds for the annulment of the award and forfeiture of the Tender Security. In that event the Procuring Entity may award the Contract to the Tenderer offering the next lowest Evaluated Tender.

46.3 Performance security shall not be required for a contract, if so specified in the **TDS**.

47. Publication of Procurement Contract

Within fourteen days after signing the contract, the Procuring Entity shall publish and publicize the awarded contract at its notice boards, entity website; and on the Website of the Authority in manner and format prescribed by the Authority. At the minimum, the notice shall contain the following information:

a) name and address of the Procuring Entity;

b) name and reference number of the contract being awarded, a summary of its scope and the selection method used;

c) the name of the successful Tenderer, the final total contract price, the contract duration.

d) dates of signature, commencement and completion of contract;

names of all Tenderers that submitted Tenders, and their Tender prices as read out at Tender opening;

48. Procurement Related Complaint

The procedures for making a Procurement-related Complaint are as specified in the **TDS.**

SECTION II – TENDER DATA SHEET (TDS)

The following specific data shall complement, supplement, or amend the provisions in the Instructions to Tenderers (ITT). Whenever there is a conflict, the provisions herein shall prevail over those in ITT.

ITT Reference	A. General
ITT I .1	Tender reference no :TENDER NO: IEBC/OT/21/06/2020-2021 Procuring Entity: The Independent Electoral and Boundaries Commission (IEBC) Name of The Contract: **Supply and Delivery of Assorted Non-Strategic Election Materials on a Three Year Framework Contract in the following Lots:** **Lot 1: Supply and Delivery of Sisal Agricultural Baler Twines - YOUTH** **Lot 2: Supply and Delivery of Branded Posters - WOMEN** **Lot 3: Supply and Delivery of Gas lamp mantles - YOUTH** **Lot 4: Supply and Delivery of Branded Badges - WOMEN**
ITT 2.3	The information made available on competing firms is as follows: N/A
ITT 2.4	The firms that provided consulting services for the contract being tendered are: N/A
ITT 3.1	Maximum number of members in the Joint Venture (JV) shall be: Two
ITT 3.7	A list of debarred firms and individuals is available on the PPRA's website: www.ppra.go.ke
ITT 3.11	Tenderers shall be required to be registered with: • Youth – YAGPO • Women – WAGPO • Persons Living With Disability - AGPO
B. Contents of Tendering Document	
ITT 6.1	Interested candidates may download the tender document from the IEBC website: www.iebc.or.keor www.tenders.go.ke.Tenderers who download the tender documents through the website are advised to registers at the Supply Chain Offices or email their contacts through procurement@iebc.or.ke before the closing date; to allow records and communication for any tender clarifications and addenda.

ITT 6.2	A pre-tender conference will not held
ITT 6.3	The questions to reach the procuring entity not later than 7 days before the closing date
ITT 6.5	The minutes of the pre-tender meeting shall be published on the website …….N/A
C. Preparation of Tenders	
ITT 13.5	The prices quoted by the Tenderer " shall not" be subject to adjustment during the performance of the contract
ITT 13.6	Prices quoted for each lot (contract) shall correspond at least to (100) percentage of the items specified for each lot (contract) Prices quoted for each lot (contract) shall correspond at least to (100) percentage of the items specified for this item of lot
ITT 13.8 (a) (iii)	Place of final destination : National Warehouse; Likoni Road Industrial Area, Nairobi
ITT 13.8 (a)(iii)	Final destination National Warehouse; Likoni Road Industrial Area, Nairobi
ITT 13.8 (b)(i)	Named place of destination, in Kenya is National Warehouse; Likoni Road Industrial Area, Nairobi
ITT 13.8 (b)(ii)	The price for inland transportation, insurance and other local services required to convey the goods from the named place of destination to their final destination which is……all inclusive of the quoted price.
ITT 13 (c) (iv)	The Place of final destination (project site) is National Warehouse; Likoni Road Industrial Area, Nairobi
ITT 14.2	Foreign currency requirements **allowed/ not allowed.**
ITT 15.4	Period of time the goods are expected to be functioning (for the purpose of spare parts) : *(Warranty Period)*
ITT 16.2 (a)	Manufacturer's authorization *("not required")*
ITT 16.2 (b)	After sales service is: *("required)*
ITT 17.1	Tenders shall remain valid for 120 days or as specified in the Invitation to tender after date of tender opening prescribed by the Commission.

ITT 17.3	(a) The number of days beyond expiry of the initial tender validity period will be 30 days. **(b)** The tender price shall be adjusted by the following percentages of the tender price: **N/A** (i) By ….% of the local currency portion of the Contract Price adjusted to reflect local inflation during the period of extension , and (ii) By ….% of the foreign currency portion of the Contract Price adjusted to reflect local inflation during the period of extension
ITT 18.1	There shall be NO tender security required
ITT 19.1	The bidders must submit one (1) ORIGINAL TENDER" and one (1) COPY of the Tender sealed in a single outer envelope
ITT 19.3	The written confirmation of authorization to sign on behalf of the Tenderer shall consist of: (***insert the name and description of the documentation required to demonstrate required to demonstrate the authority of the signatory to sign the Tender.)***
D. Submission and Opening of Tenders	
ITT 20.3	Bulky tenders which will not fit in the tender box shall be received at the Procurement Office 5th Floor ,Anniversary Towers Room 525
ITT 21.1	Completed tenders must be delivered to the address below on or before **Tuesday 15th June, 2021** **The Ag. Chief Executive Officer/Commission Secretary** **Independent Electoral and Boundaries Commission (IEBC)** **Anniversary Towers, University Way, Fifth Floor P O Box 45371-00100** **Nairobi.**
ITT 24.1	Tender will be opened on the same day **Tuesday 15th June, 2021 at 11:00 am** East African Time. Tenderers' representatives who choose to attend in the location specified in the invitation to tender. The tenderers' representatives may access the opening exercise through electronic means through a link that will be provided to bidders.
ITT 24.6	The number of representatives of the Procuring Entity to sign as per the appointment to the Opening Committee
E. Evaluation and Comparison of Tenders	
ITT 29.3	Any errors in the submitted tender arising from a miscalculation of unit price, quantity, subtotal and total bid price shall be considered as a major deviation that affects the substance of the tender and shall lead to disqualification of the tender as non-responsive.
ITT 31.1	Prices shall be quoted in Kenya Shillings.

ITT 32.3	A margin of preference and/or reservation ***("shall not")*** apply and specify the details. If margin of preference applies, the application methodology shall be defined in Section III – Evaluation and Qualification Criteria
ITT 32.5	This Invitation to tender RESERVED to YOUTH who are duly Registered with the National Treasury. The tenderers shall provide the services for the stipulated duration from the date of commencement (hereinafter referred to as the term) specified in the tender documents. Tenderers can apply for one or both Lots.
ITT 33 .2	Prices indicated on the Price Schedule shall be the cost of the services quoted including all customs duties and VAT and other taxes payable per Lot and shall remain valid for 120 days after the date of tender opening. The same information shall be indicated in the form of tender.
ITT 33 .2 (d)	Additional evaluation factors are……as may be appropriate
ITT 33 .6 (F)	Awarding shall be done per Lot.
F. Award of Contract	
ITT 46.3	Performance security if so required shall be in the sum of……. A Performance Security shall not exceed one per cent of the contract sum renewable yearly.
ITT 47	Procedures for making a procurement related complaint are detailed in the "Notice of intention to Award the Contract" herein and also available from the PPRA Website www.ppra.go.ke.

SECTION III - EVALUATION AND QUALIFICATION CRITERIA

1. General Provisions

1.1 Wherever a Tenderer is required to state a monetary amount, Tenderers should indicate the Kenya Shilling equivalent using the rate of exchange determined as follows:

a) For business turnover or financial data required for each year - Exchange rate prevailing on the last day of the respective calendar year (in which the amounts for that year is to be converted) was originally established.

b) Value of single contract - Exchange rate prevailing on the date of the contract signature.

c) Exchange rates shall be taken from the publicly available source identified in **the ITT 14.3.** Any error in determining the exchange rates in the Tender may be corrected by the Procuring Entity.

1.2 This section contains the criteria that the Procuring Entity Procuring Entity shall use to evaluate tender and qualify tenderers. No other factors, methods or criteria shall be used other than those specified in this tender document. The Tenderer shall provide all the information requested in the forms included in Section IV, Tendering Forms. The Procuring Entity should use the Standard Tender Evaluation Report for Goods and Works for evaluating Tenders.

2. Evaluation of Tenders (ITT 33)

2.1 Successful Tender or Tenders

The Procuring Entity shall use the criteria and methodologies listed in this Section to evaluate Tenders. By applying these criteria and methodologies, the Procuring Entity shall determine the successful Tender or Tenders which has/have been determined to:

a) be substantially responsive to the tender documents;

b) offer the lowest evaluated cost to the Procuring Entity for all items of Goods to be procured based on either a single Contract or all multiple Contracts combined, as the case may be, in accordance with the ITT 13.6 inviting Tender prices and discounts, and provisions made of the Tender Document for evaluation of tenders and award of contract (s); and

c) be offered by Tenderer or Tenderers that substantially meet the qualification criteria applicable for Contract or combined Contracts for which they are selected.

2.2 Evaluation of Tenders

Preliminary examination for Determination of Responsiveness

The received tenders will be evaluated in four stages as detailed below:

Stage 1: Compliance with Mandatory Requirements;

Stage 2: Technical Evaluation (Capacity to Deliver)

Stage 3: Technical Evaluation (Conformity to Specifications)

Stage 4: The Financial Evaluation (quoted prices per Lot)

Stage 1: Mandatory Requirements (MR) (LOTs 1, 2, 3 and 4)

No.	Subject	Criteria	Mandatory Requirements	Pass or Fail.
1.	Legal Capacity	To determine capacity to enter into contract.	Must submit a Copy of Certificate of incorporation/ Registration	
2.	Ownership Structure	Confirmation of details of directors and shareholders.	Must submit a copy of Company's CR12 accompanied with copies of directors' identification document.	
			If Certificate of Registration, summit copies of director's ID(s)	
3.	Tax Compliance	Proof of the bidder has fulfilled tax obligations.	Must submit a Copy of a valid tax compliance certificate	
4.	Price validity	The Form of Tender with the quoted prices confirming validity of 120 days from the tender closing date	Must submit a Duly filled, signed and stamped Form of Tender.	
			Attach separate Form of Tender for each Lot tendered for	
5.	Ethical and legal history	Proof that the bidder has not been convicted of corruption or fraudulent practices	Must submit a Duly filled, signed and stamped Anti-Corruption Declaration Form.	
6.	Page serialization	To safeguard tender documents from mutilation and manipulation	Tender document MUST be sequentially serialized on each page including all the attachments	
7.	Confidential Business Questionnaire	To provide details of business ownership structure	Must submit a Dully filled, signed and stamped Confidential Business Questionnaire	
8.	Price Quotation	To provide contractual Pricing offer for the services to be rendered.	Must submit a Duly Filled, signed and stamped the Price Schedule in the format provided.	
9.	Tender Security	To cushion against procurement proceedings risks.	Duly Filled, Stamped Tender Securing Declaration Form Authority	

10.	Registration with the relevant Authority	Evidence that the tenderer meets statutory requirements set by The National Treasury	Valid Certificate of Registration to the target group issued by the National Treasury (AGPO Certificate for the youth)	

Stage 2: The Technical Evaluation (Capacity to Deliver) (LOTs 1, 2, 3 and 4)

No	Requirements	Evidence	Fail or Fail
T1	Bank reference/opinion not older than three months from the date of tender opening indicating access to a credit line of not less than Kshs. 10 millions.	Bank Reference	
T2	Business/Company profile	Business Profile	
T3	Provide three (3) references of similar works done	References	
T4	Provide name and Contact of the person to manage contract relations	Details of Contact person	
T5	Provide two (2) sample of each Category as per schedule of requirements in conformity with the Specifications provided	Sample Submitted	

Stage 3: Technical Evaluation (Conformity to Specifications) Lot 1

Section	Specification	Description	Evidence	Pass or Fail
4.1	Materials	The fibre used shall be of such quality and fineness as is necessary to produce twines having the characteristics specified in *Table 1.* The fibre used shall be virgin, free from defects and true to type as follows: Sisal	Sample Submitted	
4.3	Runnage	The runnage of the twine shall be as specified in *Table 1*, subject to tolerance of ±5 %. This shall be determined in accordance with Annex A.	Sample Submitted	
4.4	Breaking force	The minimum breaking force of the twine shall be as specified in *Table 1.* This shall be determined in accordance with	Sample Submitted	

		Annex B.		
4.6	Minimum twine length	The minimum twine length in metres per package shall not be less than the product of the minimum runnage of the twine in m/Kg and the actual net mass of the package in kg.	Sample Submitted	
4.7	Make-up	The package shall be designed for the twine to be drawn from the center. The twine contained in each package shall be continuous throughout its length.	Sample Submitted	
4.8	Resistance to rot	The loss strength of the twine after soil burial test shall not be more than 20% of the strength of the control specimen. This shall be determined in accordance with Annex D.	Sample Submitted	
5.10	Packaging	The packages of twine, shall be packed or wrapped and bound or sewn to protect them from damage.	Sample Submitted	

Stage 3: Technical Evaluation (Conformity to Specifications) Lot 2

Section	Specification	Description	Evidence	Pass or Fail
4.1.1	Finish	When visually examined, the surface of the posters shall be smooth and free from defects such as embedded foreign matter, tears, holes, blemishes and creases.	Sample Submitted	
4.1.2	Prints and graphics	The format, colour, font, and content of the prints and graphics on the posters shall be as specified by IEBC.	Sample Submitted	
4.1.3	Colour	When visually examined, the colour of the posters shall match that of the reference sample.	Sample Submitted	

4.2	Paper and dimensions	The posters shall be made from gloss paper of 80 gsm ± 5% and the size of the paper shall be A2 or as specified by IEBC and the tolerance shall be ± 1.0 mm on width and length when tested in accordance with KS ISO 216.	Sample Submitted	
5.1	Packaging and marking	The posters shall be wrapped and sealed in packets or any other suitable material so as to prevent them from absorption of any moisture or dirt during transportation and storage. Posters containing same message or theme shall be packed together. Each packet shall contain 500 posters.	Sample Submitted	
5.2	Marking on packages	The following information shall appear in legible and indelible marking on the outside of each package: a) Printer's name and address; b) Registered trade mark, if any; c) The words "IEBC posters"; d) The quantity of posters; e) A sample of the poster shall be attached on the outside of each package;	Sample Submitted	

Stage 3: Technical Evaluation (Conformity to Specifications) Lot 3

Section	Specification	Description	Evidence	Pass or Fail
3.1	Material	The gas lamp mantle shall be manufactured preferably from silk, cotton or any other suitable material	Sample Submitted	
3.2.1	Manufacture	Stocking for the mantle shall be woven and the mantle cut to a suitable length to give the dimensions as given in Table 1.	Sample Submitted	

3.2.2	Manufacture	The mantle shall be suitably tied at the closed end and shall be provided with a thread for attachment to the nozzle, the thread being such that it retains the mantle on the nozzle even after burning. The mantle shall be treated with suitable chemicals to give the rated luminous intensity.	Sample Submitted	
4.2	Luminous intensity	The mantle shall have a minimum luminous intensity corresponding to its rated value in Table 1, when tested in accordance with clause 5.2.	Sample Submitted	
4.3	Lighting efficiency	Mantles shall have a lighting efficiency of not less than two (see 5.3).	Sample Submitted	
4.4	Capacity to withstand shock	Mantles shall be capable of withstanding the shock test prescribed in clause 5.4.	Sample Submitted	
6.1	Packaging	Each mantle shall be packed in suitable material that is moisture-proof. Ten or multiples of ten such packets shall be packed in a primary package	Sample Submitted	
6.2	Marking	Each package shall be marked with the following: a) The manufacturers' name and address; b) Registered trademark if any; c) Rated candle power; d) Quantity of the mantles; and e) Country of origin.	Sample Submitted	

Stage 3: Technical Evaluation (Conformity to Specifications) Lot 4

Section	Specification	Description	Evidence	Pas or Fail
4.1	Dimensions and physical requirements	The badge shall comply with the following physical and dimensional requirements (when sealed) given in Table 1	Sample Submitted	

4.2	Finish	When examined visually, the paper used for making the badge card shall be free from flaws such as fibre bundles, wood splinters, dust particles or any other defects that may impair its serviceability	Sample Submitted	
4.3	Prints	When examined visually, the format, colour and content of the prints on the badge shall be as specified by IEBC	Sample Submitted	
4.4	Serialization	Each badge shall be serialized with number codes as specified by the IEBC. The serialization shall be done with indelible ink	Sample Submitted	
4.5	Finish of the badge	When examined visually, the badge pouch shall be rectangular in shape, free from sharp edges and free from flaws; together with a Badge strap.	Sample Submitted	
4.6	Badge slot	The badge shall have a slot, which shall allow the strap to go through easily without any damage to the strap or the badge. Atypical example of badge strap is shown in annex A.	Sample Submitted	
4.7	Shelf life	The badge shall satisfy the requirements of this standard for a minimum of ten (10) years from the date of manufacture.	Sample Submitted	
5.1	Packaging	The badges shall be packed in such a way as to protect them from damage during transportation and storage.	Sample Submitted	

Stage 4: The Financial Evaluation (quoted prices per Lot)

ITT 33 .6 (F)	Award Criteria	The Contract will be awarded per Lot to the successful tenderer whose tender has been determined to ; **a)** Be substantially responsive to the tender document; **b)** Offer the lowest evaluated cost to the Commission for the Goods **c)** Substantially meet the qualification criteria applicable for the specific goods.

SECTION IV - TENDERING FORMS

Form of Tender

Tenderer Information Form

Tenderer JV Members Information Form

Price Schedule: Goods Manufactured Outside Kenya, to be Imported

Price Schedule: Goods Manufactured Outside Kenya, already imported

Price Schedule: Goods Manufactured in Kenya Price and Completion

Schedule – Related Services

Form of Tender Security – Demand Guarantee

Form of Tender Security (Tender Bond)

Form of Tender-Securing Declaration

Manufacturer's Authorization Form

FORM OF TENDER

INSTRUCTIONS TO TENDERERS

i) *The Tenderer must prepare this Form of Tender on stationery with its letterhead clearly showing the Tenderer's complete name and business address.*

ii) *All italicized text is to help Tenderer in preparing this form.*

iii) *Tenderer must complete and sign CERTIFICATE OF INDEPENDENT TENDER DETERMINATION and the SELF DECLARATION OF THE TENDERER attached to this Form of Tender.*

Date of this Tender submission:.....*[insert date (as day, month and year) of Tender submission]* **Tender Name and Identification:**.....*[insert identification]* **Alternative No.:**.....*[insert identification No if this is a Tender for an alternative]*

To:.....*[insert complete name of Procuring Entity]*

a) **No reservations:** We have examined and have no reservations to the Tendering document, including Addenda issued in accordance with Instructions to tenderers (ITT 7);

b) **Eligibility**: We meet the eligibility requirements and have no conflict of interest in accordance with ITT 3;

c) **Tender/Proposal-Securing Declaration**: We have not been suspended nor declared ineligible by the Procuring Entity based on execution of a Tender-Securing Declaration.
or
Proposal-Securing Declaration in Kenya in accordance with ITT 3.6;

d) **Conformity:** We offer to supply in conformity with the Tendering document and in accordance with the Delivery Schedules specified in the Schedule of Requirements the following Goods: [*insert a brief description of the Goods and Related Services*];

e) **Tender Price**: The total price of our Tender, excluding any discounts offered in item (f) below is:

Option 1, in case of one lot: Total price is: *[insert the total price of the Tender in words and figures, indicating the various amounts and the respective currencies];*

or

Option 2, in case of multiple lots: (a) Total price of each lot [*insert the total price of each lot in words and figures, indicating the various amounts and the respective currencies*]; and (b) Total price of all lots (sum of all lots) [*insert the total price of all lots in words and figures, indicating the various amounts and the respective currencies*];

f) **Discounts**: The discounts offered and the methodology for their application are:

i) The discounts offered are: [*Specify in detail each discount offered.*]

ii) The exact method of calculations to determine the net price after application of discounts are shown below: [*Specify in detail the method that shall be used to apply the discounts*];

g) **Tender Validity Period**: Our Tender shall be valid for the period specified in TDS 17.1 (as amended, if applicable) from the date fixed for the Tender submission deadline specified in TDS 21.1 (as amended, if applicable), and it shall remain binding upon us and may be accepted at any time before the expiration of that period;

(h) **Performance Security**: If our Tender is accepted, we commit to obtain a performance security in accordance with the Tendering document;

i) **One Tender per tenderer**: We are not submitting any other Tender(s) as an individual tenderer, and we are not participating in any other Tender(s) as a Joint Venture member, or as a subcontractor, and meet the requirements of ITT 3.9, other than alternative Tenders submitted in accordance with ITT 12;

j) **Suspension and Debarment**: We, along with any of our subcontractors, suppliers, consultants, manufacturers, or service providers for any part of the contract, are not subject to, and not controlled by any entity or individual that is subject to, a temporary suspension or a debarment imposed by the Procuring Entity. Further, we are not ineligible under the Kenya laws or official regulations or pursuant to a decision of the United Nations Security Council;

k) **State-owned enterprise or institution**: *[select the appropriate option and delete the other] [We are not a state- owned enterprise or institution] / [We are a state-owned enterprise or institution but meet the requirements of ITT 3.7];*

l) **Commissions, gratuities, fees:** We have paid, or will pay the following commissions, gratuities, or fees with respect to the Tendering process or execution of the Contract: *[insert complete name of each Recipient, its full address, the reason for which each commission or gratuity was paid and the amount and currency of each such commission or gratuity]*

Name of Recipient	Address	Reason	Amount

(If none has been paid or is to be paid, indicate "none.")

m) **Binding Contract**: We understand that this Tender, together with your written acceptance thereof included in your Letter of Acceptance, shall constitute a binding contract between us, until a formal contract is prepared and executed;

n) **Procuring Entity Not Bound to Accept**: We understand that you are not bound to accept the lowest evaluated cost Tender, the Best Evaluated Tender or any other Tender that you may receive; and

o) **Fraud and Corruption**: We hereby certify that we have taken steps to ensure that no person acting for us or on our behalf engages in any type of Fraud and Corruption.

(p) **Code of Ethical Conduct**: We undertake to adhere by the Code of Ethics for Persons Participating in Public Procurement and Asset Disposal, copy available from_____(*specify website*) during the procurement process and the execution of any resulting contract.

(q) **Collusive practices**: We hereby certify and confirm that the tender is genuine, non-collusive and made with the intention of accepting the contract if awarded. To this effect we have signed the "Certificate of Independent tender Determination" attached below.

(r) We, the Tenderer, have completed fully and signed the following Forms as part of our Tender:

a) Tenderer's Eligibility; Confidential Business Questionnaire – to establish we are not in any conflict to interest.

b) Certificate of Independent Tender Determination – to declare that we completed the tender without colluding with other tenderers.

c) Self-Declaration of the Tenderer – to declare that we will, if awarded a contract, not engage in any form of fraud and corruption.

d) Declaration and commitment to the Code of Ethics for Persons Participating in Public Procurement and Asset Disposal.

Further, we confirm that we have read and understood the full content and scope of fraud and corruption as informed in
"Appendix 1- Fraud and Corruption" attached to the Form of Tender.

Name of the tenderer: *[*insert complete name of the tenderer*]

Name of the person duly authorized to sign the Tender on behalf of the tenderer: **[*insert complete name of person duly authorized to sign the Tender*]

Title of the person signing the Tender: [*insert complete title of the person signing the Tender*] **Signature of the person named above**: [*insert signature of person whose name and capacity are shown above*] **Date signed** [*insert date of signing*] **day of** [*insert month*], [*insert year*]

*****: In the case of the Tender submitted by a Joint Venture specify the name of the Joint Venture as tenderer.

**: Person signing the Tender shall have the power of attorney given by the tenderer. The power of attorney shall be attached with the Tender Schedules.

CERTIFICATE OF INDEPENDENT TENDER DETERMINATION

I, the undersigned, in submitting the accompanying Letter of Tender to the_____ _____*[Name of Procuring Entity]* for:_____*[Name and number of tender]* in response to the request for tenders made by:_____*[Name of Tenderer]* do hereby make the following statements that I certify to be true and complete

in every respect:

I certify, on behalf of_____*[Name of Tenderer]* that:

1. I have read and I understand the contents of this Certificate;

2. I understand that the Tender will be disqualified if this Certificate is found not to be true and complete in every respect;

3. I am the authorized representative of the Tenderer with authority to sign this Certificate, and to submit the Tender on behalf of the Tenderer;

4. For the purposes of this Certificate and the Tender, I understand that the word "competitor" shall include any individual or organization, other than the Tenderer, whether or not affiliated with the Tenderer, who:

   a) has been requested to submit a Tender in response to this request for tenders;

   b) could potentially submit a tender in response to this request for tenders, based on their qualifications, abilities or experience;

5. The Tenderer discloses that [check one of the following, as applicable]:

   a) The Tenderer has arrived at the Tender independently from, and without consultation, communication, agreement or arrangement with, any competitor;

   b) the Tenderer has entered into consultations, communications, agreements or arrangements with one or more competitors regarding this request for tenders, and the Tenderer discloses, in the attached document(s), complete details thereof, including the names of the competitors and the nature of, and reasons for, such consultations, communications, agreements or arrangements;

6. In particular, without limiting the generality of paragraphs (5)(a) or (5)(b) above, there has been no consultation, communication, agreement or arrangement with any competitor regarding:

   a) prices;

   b) methods, factors or formulas used to calculate prices;

   c) the intention or decision to submit, or not to submit, a tender; or

   d) the submission of a tender which does not meet the specifications of the request for Tenders; except as specifically disclosed pursuant to paragraph (5)(b) above;

7. In addition, there has been no consultation, communication, agreement or arrangement with any competitor regarding the quality, quantity, specifications or delivery particulars of the works or services to which this request for tenders relates, except as specifically authorized by the procuring authority or as specifically disclosed pursuant to paragraph (5)(b) above;

8. the terms of the Tender have not been, and will not be, knowingly disclosed by the Tenderer, directly or indirectly, to any competitor, prior to the date and time of the official tender opening, or of the awarding of the Contract, whichever comes first, unless otherwise required by law or as specifically disclosed pursuant to paragraph (5)(b) above.

[Name, title and signature of authorized agent of Tenderer and Date]

…… ……

……..

Name Title Date

SELF-DECLARATION FORMS

FORM SD1

SELF DECLARATION THAT THE PERSON/TENDERER IS NOT DEBARRED IN THE MATTER OF THE PUBLIC PROCUREMENT AND ASSET DISPOSAL ACT 2015.

I,.....of Post Office Box.....being a resident of.....in the Republic of.....do hereby make a statement as follows:-

THAT I am the Company Secretary/ Chief Executive/Managing Director/Principal Officer/Director of.....*(insert name of the Company)* who is a Bidder in respect of **TenderNo.**.....for.....*(insert tender title/description)* for.....*(insert name of the Procuring entity)* and duly Authorized and competent to make this statement.

1. THAT the aforesaid Bidder, its Directors and subcontractors have not been debarred from participating in procurement proceeding under Part IV of the Act.

2. THAT what is deponed to herein above is true to the best of my knowledge, information and belief.

……	…….……	..... ……
(Title)	(Signature)	(Date)

Bidder Official Stamp

FORM SD2

SELF DECLARATION THAT THE PERSON/TENDERER WILL NOT ENGAGE IN ANY CORRUPT OR FRAUDULENT PRACTICE

I,.....of P.O. Box.....being a resident of.....in the Republic of .....do hereby make a statement as follows:-

1. THAT I am the Chief Executive/Managing Director/Principal Officer/Director of..... *(insert name of the Company)* who is a Bidder in respect of **Tender No**.....for.....*(insert tender title/description)* for.....*(insert name of the Procuring entity)* and duly authorized and competent to make this statement.

2. THAT the aforesaid Bidder, its servants and/or agents /subcontractors will not engage in any corrupt or fraudulent practice and has not been requested to pay any inducement to any member of the Board, Management, Staff and/or employees and/or agents of .....*(insert name of the Procuring entity)* which is the procuring entity.

3. THAT the aforesaid Bidder, its servants and/or agents /subcontractors have not offered any inducement to any member of the Board, Management, Staff and/or employees and/or agents of .....*(name of the procuring entity).*

4. THAT the aforesaid Bidder will not engage/has not engaged in any corrosive practice with other bidders participating in the subject tender.

5. THAT what is deponed to herein above is true to the best of my knowledge information and belief.

.....	.....	.....
(Title)	(Signature)	(Date)

Bidder's Official Stamp

DECLARATION AND COMMITMENT TO THE CODE OF ETHICS

I.....(person) on behalf of *(Name of the Business/ Company/Firm)*.....declare that I have read and fully understood the contents of the Public Procurement & Asset Disposal Act, 2015, Regulations and the Code of Ethics for persons participating in Public Procurement and Asset Disposal and my responsibilities under the Code.

I do hereby commit to abide by the provisions of the Code of Ethics for persons participating in Public Procurement and Asset Disposal.

Name of Authorized signatory.....

Sign…….....
.....

Position.....
.....

Office address……

Telephone…….....……

E-

mail…….....

.....……

Name of the Firm/Company…….....……

Date…….....……
…

(Company Seal/ Rubber Stamp where applicable)

Witness

Name

……....…

……

Sign…….....……
…

Date…….....……
…

APPENDIX 1- FRAUD AND CORRUPTION

(Appendix 1 shall not be modified)

1. Purpose

1.1 The Government of Kenya's Anti-Corruption and Economic Crime laws and their sanction's policies and procedures, Public Procurement and Asset Disposal Act *(no. 33 of 2015)* and its Regulation, and any other Kenya's Acts or Regulations related to Fraud and Corruption, and similar offences, shall apply with respect to Public Procurement Processes and Contracts that are governed by the laws of Kenya.

2. Requirements

2.1 The Government of Kenya requires that all parties including Procuring Entities, Tenderers, (applicants/proposers), Consultants, Contractors and Suppliers; any Sub-contractors, Sub-consultants, Service providers or Suppliers; any Agents (whether declared or not); and any of their Personnel, involved and engaged in procurement under Kenya's Laws and Regulation, observe the highest standard of ethics during the procurement process, selection and contract execution of all contracts, and refrain from Fraud and Corruption and fully comply with Kenya's laws and Regulations as per paragraphs 1.1 above.

2.2 Kenya's public procurement and asset disposal act *(no. 33 of 2015)* under Section 66 describes rules to be followed and actions to be taken in dealing with Corrupt, Coercive, Obstructive, Collusive or Fraudulent practices, and Conflicts of Interest in procurement including consequences for offences committed. A few of the provisions noted below highlight Kenya's policy of no tolerance for such practices and behavior:

1) a person to whom this Act applies shall not be involved in any corrupt, coercive, obstructive, collusive or fraudulent practice; or conflicts of interest in any procurement or asset disposal proceeding;

2) A person referred to under subsection (1) who contravenes the provisions of that sub-section commits an offence;

3) Without limiting the generality of the subsection (1) and (2), the person shall be—
   a) disqualified from entering into a contract for a procurement or asset disposal proceeding; or
   b) if a contract has already been entered into with the person, the contract shall be voidable;

4) The voiding of a contract by the procuring entity under subsection (7) does not limit any legal remedy the procuring entity may have;

5) An employee or agent of the procuring entity or a member of the Board or committee of the procuring entity who has a conflict of interest with respect to a procurement:-
   a) shall not take part in the procurement proceedings;
   b) shall not, after a procurement contract has been entered into, take part in any decision relating to the procurement or contract; and
   c) shall not be a subcontractor for the bidder to whom was awarded contract, or a member of the group of bidders to whom the contract was awarded, but the subcontractor appointed shall meet all the requirements of this Act.

6) An employee, agent or member described in subsection (1) who refrains from doing anything prohibited under that subsection, but for that subsection, would have been within his or her duties shall disclose the conflict of interest to the procuring entity;

7) If a person contravenes subsection (1) with respect to a conflict of interest described in subsection (5)(a) and the contract is awarded to the person or his relative or to another person in whom one of them had a direct or indirect pecuniary interest, the contract shall be terminated and all costs incurred by the public entity shall be made good by the awarding officer. Etc.

2.3 In compliance with Kenya's laws, regulations and policies mentioned above, the Procuring Entity:

a) Defines broadly, for the purposes of the above provisions, the terms set forth below as follows:

i) "corrupt practice" is the offering, giving, receiving, or soliciting, directly or indirectly, of anything of value to influence improperly the actions of another party;

ii) "fraudulent practice" is any act or omission, including misrepresentation, that knowingly or recklessly misleads, or attempts to mislead, a party to obtain financial or other benefit or to avoid an obligation;

iii) "collusive practice" is an arrangement between two or more parties designed to achieve an improper purpose, including to influence improperly the actions of another party;

iv) "coercive practice" is impairing or harming, or threatening to impair or harm, directly or indirectly, any party or the property of the party to influence improperly the actions of a party;

v) "obstructive practice" is:

- deliberately destroying, falsifying, altering, or concealing of evidence material to the investigation or making false statements to investigators in order to materially impede investigation by Public Procurement Regulatory Authority (PPRA) or any other appropriate authority appointed by Government of Kenya into allegations of a corrupt, fraudulent, coercive, or collusive practice; and/or threatening, harassing, or intimidating any party to prevent it from disclosing its knowledge of matters relevant to the investigation or from pursuing the investigation; or

- acts intended to materially impede the exercise of the PPRA's or the appointed authority's inspection and audit rights provided for under paragraph 2.3 e. below.

b) Defines more specifically, in accordance with the above procurement Act provisions set forth for fraudulent and collusive practices as follows:

"fraudulent practice" includes a misrepresentation of fact in order to influence a procurement or disposal process or the exercise of a contract to the detriment of the procuring entity or the tenderer or the contractor, and includes collusive practices amongst tenderers prior to or after tender submission designed to establish tender prices at artificial non-competitive levels and to deprive the procuring entity of the benefits of free and open competition.

c) Rejects a proposal for award[1] of a contract if PPRA determines that the firm or individual recommended for award, any of its personnel, or its agents, or its sub-consultants, sub-contractors, service providers, suppliers and/ or their employees, has, directly or indirectly, engaged in corrupt,

fraudulent, collusive, coercive, or obstructive practices in competing for the contract in question;

d) Pursuant to the Kenya's above stated Acts and Regulations, may sanction or debar or recommend to appropriate authority (ies) for sanctioning and debarment of a firm or individual, as applicable under the Acts and Regulations;

e) Requires that a clause be included in Tender documents and Request for Proposal documents requiring (i) Tenderers (applicants/proposers), Consultants, Contractors, and Suppliers, and their Sub-contractors, Sub-consultants, Service providers, Suppliers, Agents personnel, permit the PPRA or any other appropriate authority appointed by Government of Kenya to inspect[2] all accounts, records and other documents relating to the procurement process, selection and/or contract execution, and to have them audited by auditors appointed by the PPRA or any other appropriate authority appointed by Government of Kenya; and

f) Pursuant to Section 62 of the above Act, requires Applicants/Tenderers to submit along with their Applications/Tenders/Proposals a "Self-Declaration Form" as included in the procurement document declaring that they and all parties involved in the procurement process and contract execution have not engaged/will not engage in any corrupt or fraudulent practices.

---

[1]*For the avoidance of doubt, a party's ineligibility to be awarded a contract shall include, without limitation, (i) applying for pre-qualification, expressing interest in a consultancy, and tendering, either directly or as a nominated sub-contractor, nominated consultant, nominated manufacturer or supplier, or nominated service provider, in respect of such contract, and (ii) entering into an addendum or amendment introducing a material modification to any existing contract.*

[2] *Inspections in this context usually are investigative (i.e., forensic) in nature. They involve fact-finding activities undertaken by the Investigating Authority or persons appointed by the Procuring Entity to address specific matters related to investigations/audits, such as evaluating the veracity of an allegation of possible Fraud and Corruption, through the appropriate mechanisms. Such activity includes but is not limited to: accessing and examining a firm's or individual's financial records and information, and making copies thereof as relevant; accessing and examining any other documents, data and information (whether in hard copy or electronic format) deemed relevant for the investigation/audit, and making copies thereof as relevant; interviewing staff and other relevant individuals; performing physical inspections and site visits; and obtaining third party verification of information.*

TENDERER INFORMATION FORM

[The tenderer shall fill in this Form in accordance with the instructions indicated below. No alterations to its format shall be permitted and no substitutions shall be accepted.]

Date:..... *[insert date (as day, month and year) of Tender submission*]

Tender Name and Identification:.....[*insert identification*

Alternative No.:..... *[insert identification No if this is a*

Tender for an alternative] Page___of_____pages

1.Tenderer'sName*[insert Tenderer's legal name]*
2.In case of JV, legal name of each member:*[insert legal name of each member in JV]*
3.Tenderer's actual or intended country of registration: *[insert actual or intended country of registration]*
4.Tenderer'syear of registration: *[insert Tenderer's year of registration]*
5.Tenderer'sAddress in country of registration: *[insert Tenderer's legal address in country of registration]*
6.Tenderer's Authorized Representative Information Name: *[insert Authorized Representative's name]* Address: *[insert Authorized Representative's Address]* Telephone/Fax numbers: *[insert Authorized Representative's telephone/fax numbers]* Email Address: *[insert Authorized Representative's email address]*
7. Attached are copies of original documents of *[check the box(es) of the attached original documents]* ☐ For Kenyan Tenderers a current tax clearance certificate or tax exemption certificate issued by the the Kenya Revenue Authority in accordance with ITT 3.14. ☐ Articles of Incorporation (or equivalent documents of constitution or association), and/or documents of registration of the legal entity named above, in accordance with ITT3.4. ☐ In case of JV, letter of intent to form JV or JV agreement, in accordance with ITT 3.1. ☐ In case of state-owned enterprise or institution, in accordance with ITT4.6 documents establishing: (i) Legal and financial autonomy (ii) Operation under commercial law (iii) Establishing that the tenderer is not under the supervision of the Procuring Entity 2. Included are the organizational chart, a list of Board of Directors, and the beneficial ownership.

TENDERER'S ELIGIBILITY- CONFIDENTIAL BUSINESS QUESTIONNAIRE FORM

a) Instruction to Tenderer

Tender is instructed to complete the particulars required in this Form, *one form for each entity if Tender is a JV.* Tenderer is further reminded that it is an offence to give false information on this Form.

A. Tenderer's details

	ITEM	DESCRIPTION
1	Name of the Procuring Entity	
2	Name of the Tenderer	
3	Full Address and Contact Details of the Tenderer.	1. Country 2. City 3. Location 4. Building 5. Floor 6. Postal Address 7. Name and email of contact person.
4	Reference Number of the Tender	
5	Date and Time of Tender Opening	
6	Current Trade License No and Expiring date	
7	Maximum value of business which the Tenderer handles.	
8		

General and Specific Details

b) Sole Proprietor, provide the following details.

Name in full_____Age_____

c) Partnership, provide the following details.

	Names of Partners	Nationality	Citizenship	% Shares owned
1				
2				
3				

(d) Registered Company, provide the following details.

i) Private or public Company_____

ii) State the nominal and issued capital of the Company:- Nominal Kenya Shillings (Equivalent)..... Issued Kenya Shillings (Equivalent)..... ..

iii) Give details of Directors as follows.

	Names of Director	Nationality	Citizenship	% Shares owned
1				
2				
3				

e) DISCLOSURE OF INTEREST- Interest of the Firm in the Procuring Entity.

i) Are there any person/persons in.....(*Name of Procuring Entity)* who has an interest or relationship in this firm?

Yes/No..... If yes, provide details as follows.

	Names of Person	Designation in the Procuring Entity	Interest or Relationship with Tenderer
1			
2			
3			

ii) Conflict of interest disclosure

	Type of Conflict	Disclosure YES OR NO	If YES provide details of the relationship with Tenderer
1	Tenderer is directly or indirectly controlled by or is under common control with another tenderer.		
2	Tenderer receives or has received any direct or indirect subsidy from another tenderer.		
3	Tenderer has the same legal representative as another tenderer		
4	Tender has a relationship with another tenderer, directly or through common third parties, that puts it in a position to influence the tender of another tenderer, or influence the decisions of the Procuring Entity regarding this tendering process.		
5	Any of the Tenderer's affiliates participated as a consultant in the preparation of the design or technical specifications of the works that are the subject of the tender.		
6	Tenderer would be providing goods, works, non-consulting services or consulting services during implementation of the contract specified in this Tender Document.		
7	Tenderer has a close business or family relationship with a professional staff of the Procuring Entity who are directly or indirectly involved in the preparation of the Tender document or specifications of the Contract, and/or the Tender evaluation process of such contract.		
8	Tenderer has a close business or family relationship with a professional staff of the Procuring Entity who would be involved in the implementation or supervision of the such Contract.		
9	Has the conflict stemming from such relationship stated in item 7 and 8 above been resolved in a manner acceptable to the Procuring Entity throughout the tendering process and execution of the Contract.		

f) Certification

On behalf of the Tenderer, I certify that the information given above is correct.

Full Name_____

(Signature) *(Date)*

TENDERER'S JV MEMBERS INFORMATION FORM

[The tenderer shall fill in this Form in accordance with the instructions indicated below. The following table shall be filled in for the tenderer and for each member of a Joint Venture]].

Date:.....*[insert date (as day, month and year) of Tender submission].*

Tender Name and Identification:.....*[insert identification* Alternative No.:.....*[insert identification No if this is a Tender for an alternative].*

Page_____of_____pages

1. Tenderer's Name: *(insert Tenderer's legal name)*
2. Tenderer's JV Member's name: (*insert JV's Member's legal name)*
3. Tenderer's JV Member's country of registration name: (*insert JV's Member's country of registration)*
4. Tenderer's JV Member's year of registration: (*insert JV's* Members year of registration*)*
5. Tenderer's JV Member's legal address in the country of registration: (*insert JV's Member's legal address in the country of registration)*
6. Tenderer's JV Member's authorized representative information Name: (*insert name of JV's Member's authorized representative)* Address : (*insert address of JV's Member's authorized representative)* Telephone/ Fax numbers: (*insert Telephone/ Fax numbers of JV's Member's authorized representative)* Telephone/ Fax numbers: (*insert email address of JV's Member's authorized representative)*
7. Attached are copies of original documents of *(check the box(es) of the attached original documents)* ☐ Articles of Incorporation (or equivalent documents of constitution or association), and/or registration documents of the legal entity named above, in accordance with ITT 4.4. ☐ In case of a state - owned enterprise or institution, documents establishing legal and financial autonomy, operation in accordance with commercial law, and that they are not under the supervision of the procuring entity, in accordance with ITT4.6
8. Included are the Organizational Chart, a List Of Board of Directors, and beneficial ownership

Price Schedule Forms

*[The tenderer shall fill in these Price Schedule Forms in accordance with the instructions indicated. The list of line items in column 1 of the **Price Schedules** shall coincide with the List of Goods and Related Services specified by the Procuring Entity in the Schedule of Requirements.]*

Price Schedule: Goods Manufactured Outside Kenya, to be Imported.

							Date …….. Alternative No…….. Page No…….of……..	
1	2	3	4	5	6	7	8	9
Line Item No	Description of Goods	Country of Origin	Delivery date as defined by Incoterms	Quantity and Physical Unit	Unit price CIP *(insert place of destination)* in accordance with ITT 14.8(b)(i)	CIP Price per line Item (Col. 5x6)	Price per item for inland transportation and other services required in Kenya to covey the Goods to their final destination specified in TDS	Total Price per Line Item (Col. 7+8)
(insert number of the item)	*(insert name of good)*	*(insert Country of origin of the good)*	*(insert quoted Delivery Date)*	*(insert number of units to be supplied and name of the physical unit)*	*(insert unit price CIP per unit)*	*(insert total CIP price per line item)*	*(insert the corresponding price per line item)*	*(insert total price of the line item)*
Lot 1:	Supply and Delivery of Sisal Agricultural Baler Twines							
Lot 2:	Supply and Delivery of Branded Posters							
Lot 3:	Supply and Delivery of Gas lamp mantles							
Lot 4:	Supply and Delivery of Branded Badges							
							Total Price	

Name of tenderer *[insert complete name of tenderer]* Signature of tenderer *[signature of person signing the Tender]* Date *[Insert Date]*

Price Schedule: Goods Manufactured Outside Kenya, already Imported.

(Group C Tenders, Goods already imported) Currencies in accordance with ITT 15									Date …….. Alternative No…….. Page No…….of……..		
1	2	3	4	5	6	7	8	9	10	11	12
Line Item No	Description of Goods	Country of Origin	Delivery date as defined by Incoterms	Quantity and Physical Unit	Quantity Price including Custom Duties and Import Taxes paid, in accordance with ITT 14.8 {c}(i)	Custom Duties and Import Taxes paid per unit in accordance with ITT 14.8 {c} (ii) (to be supported by documents)	Unit Price of Custom Duties and Import Taxes paid, in accordance with ITT 14.8 {c}(iii) (Col.6 minus Col.7)	Price per Line Item net of Custom Duties and Import Taxes paid, in accordance with ITT 14.8 (c)(i) (Col. 5x8)	Price per Line Item for inland transportation and other services required in Kenya to convey the goods to their final destination, as specified in TDS , in accordance with ITT 14.8 (c)(v)	Sales and other taxes paid or payable per item if Contract is awarded (in accordance with ITT 14.8 (c)(iv)	Total price per line item (Col.9+ 10)
(insert number of the item)	*(insert name of good)*	*(insert Country of origin of the good)*	*(insert quoted Delivery Date)*	*(insert number of units to be supplied and name of the physical unit)*	*(insert unit price per unit)*	*(insert custom duties and taxes paid per unit)*	*(insert unit price net of custom duties and import taxes)*	*(insert price per line item net of custom duties and import taxes)*	*(insert price per line item for inland transportation and other services required in Kenya)*	*(insert sales and other taxes payable per item if Contract is awarded)*	*(insert total price per line item)*
Lot 1:	Supply and Delivery of Sisal Agricultural Baler Twines										
Lot 2:	Supply and Delivery of Branded Posters										
Lot 3:	Supply and Delivery of Gas lamp mantles										
Lot 4:	Supply and Delivery of Branded Badges										
									Total Price		

Price Schedule: Goods Manufactured in Kenya

						Date _____ Alternative No: _____ Page of N° _____				
1	2	3	4	5	6	7	8	9	10	
Line Item No.	Description of Goods	Delivery date as defined by incoterms	Quantity and physical unit	Unit Price EXW	Total EXW price per line item (Col. 4x5)	Price per line item for inland transportation and other related services to convey Goods to their final destination	Cost of local labor, raw materials and components from with origin in Kenya % of Col.5	Sales and other taxes payable per line item if contract is awarded (in accordance with ITT 14.8(a)(ii)	Total price per line item (Col. 6+7)	
(insert number of the item)	*(insert name of good)*	*(insert quoted Delivery Date)*	*(insert number of units to be supplied and name of the physical unit)*	*(insert EXW unit price)*	*(insert total EXW price per line item)*	*(insert the corresponding price per line item)*	*(insert Cost of local labor, raw materials and components from within the purchase's country as a % of the EXW price per line item.)*	*(insert sales and other taxes payable per line item if Contract is awarded)*	*(insert total price per item)*	
Lot 1:	Supply and Delivery of Sisal Agricultural Baler Twines									
Lot 2:	Supply and Delivery of Branded Posters									
Lot 3:	Supply and Delivery of Gas lamp mantles									
Lot 4:	Supply and Delivery of Branded Badges									
									Total Price	

Price Schedule: Goods Manufactured in Kenya – To be ordered as and when required

Date: _____

Alternative No._____

Page of No._____

1	2	3	4	5	6	7
Line Item No.	Description of Goods	Quantity of physical unit (Piece)	Unit Price Per Unit	Total Price per Lot (Exclusive of taxes)	Total Taxes	Total Price Per Lot (Inclusive of Taxes)
Lot 1:	Supply and Delivery of Sisal Agricultural Baler Twines	10				
Lot 2:	Supply and Delivery of Branded Posters	25				
Lot 3:	Supply and Delivery of Gas lamp mantles	20				
Lot 4:	Supply and Delivery of Branded Badges	90				
					Total Price	

The total price SHALL be transferred to the Form of Tender

Name of tenderer *[insert complete name of tenderer]* Signature of tenderer *[signature of person signing the Tender]* Date *[Insert Date]*

FORM OF TENDER SECURITY - DEMAND BANK GUARANTEE

Beneficiary: _____

ITT No: _____

Date: _____

TENDER GUARANTEE No.: _____

Guarantor: _____

1. We have been informed that_____(hereinafter called "the Applicant") has submitted or will submit to the Beneficiary its Tender (hereinafter called "the Tender") for the execution of_____under Request for Tenders No._____("the ITT").

2. Furthermore, we understand that, according to the Beneficiary's conditions, Tenders must be supported by a Tender guarantee.

3. At the request of the Applicant, we, as Guarantor, hereby irrevocably undertake to pay the Beneficiary any sum or sums not exceeding in total an amount of_____(_____) upon receipt by us of the Beneficiary's complying demand, supported by the Beneficiary's statement, whether in the demand itself or a separate signed document accompanying or identifying the demand, stating that either the Applicant:

   a) has withdrawn its Tender during the period of Tender validity set forth in the Applicant's Letter of Tender ("the Tender Validity Period"), or any extension thereto provided by the Applicant; or

   b) having been notified of the acceptance of its Tender by the Beneficiary during the Tender Validity Period or any extension thereto provided by the Applicant, (i) has failed to execute the contract agreement, or (ii) has failed to furnish the Performance.

4. This guarantee will expire: (a) if the Applicant is the successful Tenderer, upon our receipt of copies of the contract agreement signed by the Applicant and the Performance Security and, or (b) if the Applicant is not the successful Tenderer, upon the earlier of (i) our receipt of a copy of the Beneficiary's notification to the Applicant of the results of the Tendering process; or (ii)twenty-eight days after the end of the Tender Validity Period.

5. Consequently, any demand for payment under this guarantee must be received by us at the office indicated above on or before that date.

_____

[signature(s)]

FORM OF TENDER SECURITY (TENDER BOND)

[The Surety shall fill in this Tender Bond Form in accordance with the instructions indicated.]

BOND NO. _____

1. BY THIS BOND.....*[name of tenderer]* as Principal (hereinafter called "the Principal"), and..... *[name, legal title, and address of surety]*,**authorized to transact business in** *[name of country of Procuring Entity],* as Surety (hereinafter called "the Surety"), are held and firmly bound unto..... *[name of Procuring Entity]* as Obligee (hereinafter called "the Procuring Entity") in the sum of.....*[amount of Bond]*[1] *[amount in words]*, for the payment of which sum, well and truly to be made, we, the said Principal and Surety, bind ourselves, our successors and assigns, jointly and severally, firmly by these presents.

2. WHEREAS the Principal has submitted or will submit a written Tender to the Procuring Entity dated the _____ day____of_____, 20_____, for the supply of_____*[name of Contract]* (hereinafter called the "Tender").

3. NOW, THEREFORE, THE CONDITION OF THIS OBLIGATION is such that if the Principal:

   a) has withdrawn its Tender during the period of Tender validity set forth in the Principal's Letter of Tender ("the Tender Validity Period"), or any extension thereto provided by the Principal; or

   b) having been notified of the acceptance of its Tender by the Procuring Entity during the Tender Validity Period or any extension thereto provided by the Principal; (i) failed to execute the Contract agreement; or
   (ii) has failed to furnish the Performance Security, in accordance with the Instructions to tenderers ("ITT") of the Procuring Entity's Tendering document.

   then the Surety undertakes to immediately pay to the Procuring Entity up to the above amount upon receipt of the Procuring Entity's first written demand, without the Procuring Entity having to substantiate its demand, provided that in its demand the Procuring Entity shall state that the demand arises from the occurrence of any of the above events, specifying which event(s) has occurred.

4. The Surety hereby agrees that its obligation will remain in full force and effect up to and including the date 30 days after the date of expiration of the Tender Validity Period set forth in the Principal's Letter of Tender or any extension thereto provided by the Principal.

5. IN TESTIMONY WHEREOF, the Principal and the Surety have caused these presents to be executed in their respective names this__day of_____20_____.

Principal:_____ Corporate Seal (where appropriate) Surety: _____

_____ _____

(Signature) *(Signature)*

(Printed name and title) *(Printed name and title)*

[1]The amount of the Bond shall be denominated in the currency Kenya shillings or the equivalent amount in a freely convertible currency

FORM OF TENDER-SECURING DECLARATION

[The Bidder shall complete this Form in accordance with the instructions indicated]

Date:.....*[insert date (as day, month and year) of Tender Submission]*

Tender No.:.....*[insert number of tendering process]*

To:.....*[insert complete name of*

Purchaser] I/We, the undersigned, declare that:

1. I/We understand that, according to your conditions, bids must be supported by a Tender-Securing Declaration.

2. I/We accept that I/we will automatically be suspended from being eligible for tendering in any contract with the Purchaser for the period of time of *.....[insert number of months or years]* starting on *.....[insert date]*, if we are in breach of our obligation(s) under the bid conditions, because we – (a) have withdrawn our tender during the period of tender validity specified by us in the Tendering Data Sheet; or (b) having been notified of the acceptance of our Bid by the Purchaser during the period of bid validity, (i) fail or refuse to execute the Contract, if required, or (ii) fail or refuse to furnish the Performance Security, in accordance with the instructions to tenders.

3. I/We understand that this Tender Securing Declaration shall expire if we are not the successful Tenderer(s), upon the earlier of:

   a) our receipt of a copy of your notification of the name of the successful Tenderer; or

   b) thirty days after the expiration of our Tender.

4. I/We understand that if I am/we are/in a Joint Venture, the Tender Securing Declaration must be in the name of the Joint Venture that submits the bid, and the Joint Venture has not been legally constituted at the time of bidding, the Tender Securing Declaration shall be in the names of all future partners as named in the letter of intent.

Signed:……..
..

Capacity / title (director or partner or sole proprietor, etc.) …….
…….....

Name:
…….....

Duly authorized to sign the bid for and on behalf of: .....*[insert complete name of Tenderer].* Dated on ..... day of ..... *[Insert date of signing].*

Seal or stamp.

MANUFACTURER'S AUTHORIZATION FORM

*[The tenderer shall require the Manufacturer to fill in this Form in accordance with the instructions indicated. This letter of authorization should be on the letterhead of the Manufacturer and should be signed by a person with the proper authority to sign documents that are binding on the Manufacturer. The tenderer shall include it in its Tender, if so indicated in the **TDS.**]*

Date:.....*[insert date (as day, month and year) of Tender submission]*

ITT No.:.....*[insert number of ITT process]* Alternative No.:.....*[insert identification No if this is a Tender for an alternative]*

To:.....*[insert complete name of Procuring Entity]* WHEREAS

We..... *[insert complete name of Manufacturer]*, who are official manufacturers of.....*[insert type of goods manufactured]*, having factories at [insert full address of Manufacturer's factories], do hereby authorize *[insert complete name of tenderer]* to submit a Tender the purpose of which is to provide the following Goods, manufactured by us..... *[insert name and or brief description of the Goods]*, and to subsequently negotiate and sign the Contract.

We hereby extend our full guarantee and warranty in accordance with Clause 28 of the General Conditions of Contract, with respect to the Goods offered by the above firm.

Signed:.....*[insert signature(s) of authorized representative(s) of the Manufacturer]*

Name:.....*[insert complete name(s) of authorized representative(s) of the Manufacturer]*

Title:.....*[insert title]*

Dated on_____day of_____,_____*[insert date of signing]*

PART 2: SUPPLY REQUIREMENTS

SECTION V - SCHEDULE OF REQUIREMENTS

Notes for Preparing the Schedule of Requirements

The Schedule of Requirements shall be included in the Tendering document by the Procuring Entity, and shall cover, at a minimum, a description of the goods and services to be supplied and the delivery schedule.

The objective of the Schedule of Requirements is to provide sufficient information to enable tenderers to prepare their Tenders efficiently and accurately, in particular, the Price Schedule, for which a form is provided in Section IV. In addition, the Schedule of Requirements, together with the Price Schedule, should serve as a basis in the event of quantity variation at the time of award of contract pursuant to ITT 42.1.

The date or period for delivery should be carefully specified, taking into account (a) the implications of delivery terms stipulated in the Instructions to tenderers pursuant to the *Incoterms* rules that "delivery" takes place when goods are delivered **to the final place of delivery**, and (b) the date prescribed herein from which the Procuring Entity's delivery obligations start (i.e., notice of award, contract signature, opening or confirmation of the letter of credit).

Lot 1: Sisal agricultural baler twines — Specification

1 Scope

This IEBC Standard specifies the requirements for sisal agricultural baler twine.

2. Definitions

For the purpose of this standard, the following definitions shall apply.

2.1
Yarn
An assembly of fibres spun into a continuous length

2.2
Strand
A product obtained by joining and twisting together several yarns of group of yarns together

2.3
Twine
A product consisting of the one or more yarns twisted together or wound to form a structure of continuous length

2.4
Agricultural baler twine
A chemically treated twine intended to be used primarily in agriculture for binding the bundles on automatic pick-up balers or the sheaves on reaping and binding machines or on similar machines. The chemical treatment is for preservation against rot

2.5
Package
The unit of packaging in which twines are supplied and which may be in form of spool, coil or ball

2.6
Pack
A parcel or two or more spools

3. Designation

Baler twines shall be designated as follows: "Sisal agricultural baler twine" followed by its code number.

Example of designation:

A sisal agricultural baler twine having a length of 300 meters per kilogram is designated as follows:

"Sisal agricultural baler twine No. 300".

4. Requirements

4.1 Materials

The fibre used shall be of such quality and fineness as is necessary to produce twines having the characteristics specified in Table 1. The fibre used shall be virgin, free from defects and true to type as follows:

Sisal (*Agave sisalana* and or any other agave hydrid).

4.2 Construction

The twine shall be evenly and well spun and shall be substantially circular in cross-section.

4.3 Runnage

The runnage of the twine shall be as specified in Table 1, subject to tolerance of ±5 %. This shall be determined in accordance with Annex A.

4.4 Breaking force

The minimum breaking force of the twine shall be as specified in Table 1. this shall be determined in accordance with Annex B.

4.5 Other agricultural baler twines

Where the runnage of the agricultural baler twine is not covered by Table 1, its runnage shall be as declared subject to a tolerance of ±5 % and the specification for its minimum breaking force shall be calculated from the following formula:

$$R = \frac{20400}{n} - 18$$

Where,

R = is the breaking force in decanewtons, and
n = is the runnage of the twine in m/kg.

4.6 Minimum twine length

The minimum twine length in metres per package shall not be less than the product of the minimum runnage of the twine in m/Kg and the actual net mass of the package in kg.

4.7 Make-up

4.7.1 The package shall be designed for the twine to be drawn from the center.

4.7.2 The twine contained in each package shall be continuous throughout its length.

4.8 Resistance to rot

The loss strength of the twine after soil burial test shall not be more than 20% of the strength of the control specimen. This shall be determined in accordance with Annex D.

5.9 Amount of additives

The amount of additives (rot resistant agents and lubricants) in the twine shall be as declared subject to a tolerance of ± 5 %. This shall be determined in accordance with Annex C.

Table 1 — Properties of sisal agricultural baler twines

Twine designation	Runnage, m/kg	Breaking force daN, min.
125	125	145
150	150	118
200	200	84
300	300	50

5.10 Packaging

The packages of twine, shall be packed or wrapped and bound or sewn to protect them from damage.

5.11 Marking

5.11.1 Unit packages

Each package shall have a label securely attached with the following information:

i) Manufacturer's name or registered trade mark;

ii) Designation of the twine in accordance with Clause 4;

iii) Minimum twine length in metres;

iv) Mass of the package in kg;

v) Made in Kenya.

5.11.2 Bulk containers

Each container (bale, pack, or box) shall have a label securely attached bearing the following information:

i) Manufacturer's name or registered trade mark;

ii) Designation of the twine in accordance with Clause 3;

iii) Number of packages in each container;

iv) Gross mass of each container;

v) Country of origin/manufacture;

Annex A
(Normative)
Determination of linear density and runnage

A.1 Principle

Weighing, under specified conditions, specimens of specified length, then calculation of the linear density and the runnage (or length in metres per kilogram)

A.2 Apparatus

A.2.1 Balance, accurate to 0.5 g

A.2.2 Wrap-reel of known perimeter

A.3 Specimens

A.3.1 Selection

Select 30 m of twine from each spool, proceeding in the following manner:

Directly from the center of each spool, in the opposite direction o the twines, draw the first 10 m of twine and discard them. Then draw 30 m of twine and wind them as adjacent turns (without overlapping) on the warp-reel exercising just sufficient tension on the twine to maintain straightness.

Each specimen of 30 m thus obtained constitutes a test piece.

A.3.2 Conditioning

The tests shall be carried out in an ambient atmosphere condition provided that the twine has been kept in conditions which do not damage its original properties.

In case of dispute, leave the specimens for 48 hours in a standard atmosphere for testing (temperature 23 ± 2 °C, relative humidity 65 ± 2 %) before continuing with the tests.

A.4 Procedure

Weigh each specimen to the nearest 0.5 g let m_1, be the mass obtained in grams).

A.5 Expression of results

A.5.1 Calculation of linear density

For each specimen, calculate the linear density T, in tex, using the following formula:

$$T = \frac{1000M}{30}$$

Where,

m_1 = the mass, in grams, of the specimen,

A.5.2 Calculation of runnage

Calculate the runnage L in metres per kilogram of twine using the following formula:

$$L = \frac{10^6}{T}$$

Where,

T = The linear density in tex.

A.5.3 If a specimen is outside the tolerance, a check test shall be carried out on another spool.

If the result of the check test is found to be within the limits of the permitted tolerances (see the table of clause 5.3, it is the result of the check test which is adopted for the value of the linear density.

Annex B

Determination of breaking force

B.1 Principle

Measurement of the forces (expressed in decanewtons) necessary to break, under known conditions, a specimen of specified length.

B.2 Apparatus

Tensile testing machine having a constant rate of traverse, with amobil grip. This testing machine should comprise:

B.2.1 Two devices for gripping the ends of the test piece.

B.2.2 Device for maintaining the rate of traverse constant at 500 ± 50 mm min.

B.2.3 Device for indicating or recording the runnage, draw directly from the center of each spool in the opposite direction to the twist, and without cutting the twine, ten specimens spaced 5 m from each other and of sufficient length so that once they are mounted in the testing machine, the free length of the specimen between the gripping devices is as near as possible 500 mm.

Each specimen shall be identified by reference to the spool from which it has been drawn.

B.4 Procedure

B.4.1 Check that the speed of movement of the moving grips or the machine is constant and equal to 500 ± 50 mm/min.

B.4.2 Before mounting the test piece between the grips, check that the axis of the latter are as near as possible 500 mm apart.

B.4.3 Mount the specimen in the machine so that it coincides with the axis of pull, taking core to avoid loss of twist other than that inevitably lost in drawing out the twine.

B.4.4 Start the machine and apply the force continuously until the specimen breaks. If a specimen breaks in the grips, or as a result of damage by them, remove it and start against with a new specimen.

B.5 Expression of results

For the breaking force test, take into consideration only the results obtained when the break occurs between the grips of the testing machine.

If any one of the ten specimens from a sample spool fails to reach the minimum breaking force specified in the table for the twine being tested, the result shall be rejected and another spool of twine sampled in its place.

This retest procedure is applicable to all sample spools representing a lot.

Should any test result from the retest sample or spools fails to reach the minimum breaking force requirement, the batch represented by the sample spools shall be deemed not to comply with this Kenya standard.

Annex C

Determination of extractable lubricant and preservative

C.1 Principle

Extraction by a suitable solvent of lubricants and preservative contained in a specific mass of twine, then weighing of the lubricant and preservative residue after removing the solvent and drying.

C.2 Apparatus

C.2.1 Balance accurate to 0.05 g

C.2.2 Soxhlet extraction apparatus

C.2.3 Extraction cartridges for soxhlet apparatus

C.2.4 Oven, adjustable to 103 ± 2 °C

C.3 Specimens

C.3.1 Selection

Select from each spool a sample of about 10 g of twine, the total mass thus selected shall be enclosed in a plastic bag rolled up and dispatched to the test laboratory.

C.3.2 Conditioning

The tests shall be carried out in ambient atmospheric condition provided that the twine has been kept in conditions which do not damage its original properties. In case of disputes, leave the specimens for 48 hours in a standard atmosphere (temperature 23 ± 2 °C relative humidity 65 + 2 %, before continuing with the tests.

C.4 Procedure

Select a representative specimen, of mass at least 40 g, from the total mass obtained in C.3.1. If this cannot be extracted in one operation, divide this specimen into two and extract the two parts separately.

Weigh the specimen or specimens together to the nearest 0.05 g, place them in an extraction cartridge and insert them into the soxhelt apparatus after calibrating the extraction flask of the apparatus.

C.5 Expression of results

Calculate the extractable preservative and lubricant, G, expressed as a percentage of the total mass of the specimens, by using the following formula:

$$G = \frac{100_2^m}{m_3}$$

Where,

m_2 = the mass, in grams, of extracted lubricant, and

m_3 = the total mass, in grams, of the specimens.

If necessary, take the average of the results obtained.

C.6 Test report

In addition to the results obtained, the test report shall include the following:

a) The reference to this Kenya standard;

b) The solvent used in determination of extractable lubricant and preservative;

c) Designation of the twine;

d) Any operating details not stated in this Kenya Standard and any possible incidents likely to have had an effect upon the results.

Annex D

Determination of resistance to rot-soil burial method

D.1 Principles

Specimens are subjected to microbiological attack by soil burial and the resistance to attach is evaluated in terms of loss in breaking strength of the specimens resulting from the soil burial.

D.2 Standard atmosphere for conditioning and testing. Use the standard atmosphere for conditioning and testing specified in KS 08-32[1)].

D.3 Test specimens

D.3.1 Specimens length

Each specimen shall be 600 mm long and tied around stainless steel or glass frame in a single loop.

D.3.1 Number of specimens

Twenty (20) specimens shall be taken in equal portions from the packages (spools) in the laboratory sample.

D.4 Apparatus and reagents

D.4.1 Apparatus

The following apparatus is required;

D.4.1.1 Soil containers of sufficient size to hold soil and specimens at a depth of 45 mm to 65 mm, and fitted with a loose fitting lid, so as to maintain the moisture content of the soil at 20 % to 30 %.

D.4.1.2 Glass plates to separate specimens in the soil containers.

D.4.1.3 Control cloth, complying with the following requirements:

100 % cotton

Warp: 18.5 tax Z886 x 2 S 748

[1)] Conditions for the testing of textiles.

Weft: 30 tex Z630 x 2 S 748

Weave: Plain, 34 ends/cm, 17 picks/cm with brown and green threads at 0.5 cm and 1.0 cm intervals so that strips with identical number of threads can be prepared.

Mass per unit area: 230 g/m^2

Finish: scoured only

D.4.1.4 Means for maintaining the soil bed at 28 ± 1 °C.

D.4.2 Regents

The following reagents are required.

D.4.2.1 Soil with moisture content between 20 % and 30 % based on dry mass, a pH of 5.5. to 7 pesticide free.

Various types of soil that have been found suitable for this test include garden and naturally fertile topsoil, composts and greenhouse potting soil. These usually possess the proper physical characteristics, along with an organic content sufficient to ensure a high degree of microbial activity and the represents of cellulose destroying organisms.

NOTE Small weighed samples of soil, taken at random and dried to a constant mass at 10 °C may be used to calculate the moisture of the bulk It is essential to discard such samples as the high temperature drying can interfere with the microbiological activity of the soil).

D.4.2.2 Ethanol, 70 % solution

D.5 Procedure

D.5.1 Soil verification

On each occasion that a new supply of soil is sued, subject five specimens of the cotton control cloth to the procedure given in D.5.2 and D.5.3 and assess the strength loss after seven days burial.

The specimens should show a strength loss of at least 80 %. If this is not the case, renew the soil supply.

D.5.2 Burial procedure

Use specimens prepared specified in Clause D.3. Bury the specimens with frame vertical and with soil approximately half way up the frame. Ensure that there is at least 15 mm of soil below the bottom of the frame. Place the soil container with specimens, into an incubator at 28 ± 1°C and a relative humidity of 95 % minimum.

D.5.3 Exposure

After 14 days, remove soil from the specimens by careful brushing and then gently rinse the specimens in water. Sterilize the specimens by soaking them in 70 % ethanol at room temperature for four (4) hours, dry them and then condition them in accordance with Clause D.2.

D.6 Assessment of loss in strength

Test the specimens in accordance with Annex B.

Express the strength of the exposed specimen as a percentage of unexposed (as received) specimens. The loss

in strength is then the difference between 100 % and the result obtained.

For example:

If No is the strength of unexposed specimen and Ne is the strength of the exposed specimen, then the percentage loss in strength is given by:

$$N_1 = 100 - \frac{100\,Ne}{No} = 100\left(1 - \frac{Ne}{No}\right)\%$$

Where

N_1 is the loss in strength.

D.7 Test report

The test report shall include the following particulars:

a) Reference to this Kenya Standard;

b) Description of the material;

c) Reference to any pre-treatment used;

d) For each specimens percentage strength loss;

e) Any other alterations to the test likely to have had an effect on the results.

Lot 2: Supply and Delivery of Branded Posters

Posters — Specification

1 Scope

This IEBC Standard Kenya specifies the requirements for posters used for voter education and publicity.

2 Normative references

The following documents are indispensable for the application of this standard:

KS 03-05 Glossary of terms used in paper industry and trade.

ISO 187, Paper and board —Conditioning of samples

ISO 216:2007 Writing paper and certain classes of printed matter -- Trimmed sizes -- A and B series, and indication of machine direction

KS ISO 287, Paper and board — Determination of moisture content of a lot — Oven-drying method

ISO 536,Paper and board -- Determination of grammage

ISO 535:2014 Paper and board -- Determination of water absorptiveness -- Cobb method

ISO 2471, Paper and board -- Determination of opacity (paper backing) — Diffuse reflectance method

ISO 2470-1, Paper, board and pulps — Measurement of diffuse blue reflectance factor — Part 1: Indoor daylight conditions (ISO brightness)

ISO 1762, Paper, board and pulps -— Determination of residue (ash) on ignition at 525 degrees C

KS 03-05, Glossary of terms used in paper industry and trade

KS ISO 1924-2, Paper and board — Determination of tensile properties — Part 2: Constant rate of elongation method (20 mm/min)

ISO 2471 *Paper and board — Determination of opacity (Paper packing) — Diffuse reflectance method.*

KS ISO 12040 *Graphic technology — Prints and printing inks — Assessment of light fastness using filtered xenon arc light.*

3 Definitions

For the purposes of this standard, the following definitions and those given in KS 03-05 shall apply:

3.1
IEBC

Independent Electoral and boundaries Commission

3.2
Poster
Printed sheet of paper published by the IEBC for voter education and publicity

3.3
Reference sample
Poster accepted by the IEBC as the basis for supply or processing.

4 Requirements

4.1 Workmanship

4.1.1 Finish

When visually examined, the surface of the posters shall be smooth and free from defects such as embedded foreign matter, tears, holes, blemishes and creases.

4.1.2 Prints and graphics

The format, colour, font, and content of the prints and graphics on the posters shall be as specified by IEBC.

4.1.3 Colour

When visually examined, the colour of the posters shall match that of the reference sample.

4.2 Paper and dimensions

The posters shall be made from gloss paper of 80 gsm ± 5% and the size of the paper shall be A2 or as specified by IEBC and the tolerance shall be ± 1.0 mm on width and length when tested in accordance with KS ISO 216.

4.3 Physical requirements

The paper for the posters shall comply with physical requirements given in Table 1.

Table 1 — Physical requirements

Sl No	Characteristic	Requirement	Test method
i)	Grammage, (gsm), ± 5%	80	KS ISO 536
ii)	Tear factor, (Nm^2/g), min.	55	KS ISO 1924-2
iii)	Breaking length, (m), min.	2 700	KS ISO 1924-2
iv)	Moisture content, (%), range	4 – 7	KS ISO 287
v)	Cobb, per minute, (g/m^2), max.	20	ISO 535:2014
vi)	Opacity[1)]	78	ISO 2471
[1)] Applicable to white papers and white board.			

5 Packaging and marking

5.1 Packaging

5.1.1 The posters shall be wrapped and sealed in packets or any other suitable material so as to prevent them from absorption of any moisture or dirt during transportation and storage.

5.1.2 Posters containing same message or theme shall be packed together.

5.1.3 Each packet shall contain 500 posters.

5.2 Marking on packages

The following information shall appear in legible and indelible marking on the outside of each package:

c) Printer's name and address;

d) Registered trade mark, if any;

c) The words "IEBC posters";

d) The quantity of posters;

e) A sample of the poster shall be attached on the outside of each package;

Annex A
(informative)
Classification of posters

The posters shall be classified as follows:

a) Voter Education
b) Voter Registration
c) Corporate Communication
d) Election Operations
e) Any other posters as specified by IEBC.

Lot 3: Supply and Delivery of Gas lamp mantles – YOUTH

Specifications

1 Scope

This Independent Electoral and Boundaries Commission standard specifies the requirements for gas lamp mantles for lighting appliances using illuminating liquefied petroleum gas or kerosene.

2 Definitions

For the purposes of this standard, the following definitions shall apply.

2.1
IEBC
Independent Electoral and Boundaries Commission

2.2
Gas lamp mantle
A woven bag of suitable material which illuminates while burning with liquefied petroleum gas or illuminating kerosene

2.3
Candle power
The luminous intensity expressed in lumens

2.4
Mean horizontal candle power
Average of all the intensities in lumens measured in a horizontal plane passing through the centre of the luminous mantle

3 Requirements

3.1 Material

The gas lamp mantle shall be manufactured preferably from silk, cotton or any other suitable material.

3.2 Manufacture

3.2.1 Stocking for the mantle shall be woven and the mantle cut to a suitable length to give the dimensions as given in Table 1.

3.2.2 The mantle shall be suitably tied at the closed end and shall be provided with a thread for attachment to the nozzle, the thread being such that it retains the mantle on the nozzle even after burning. The mantle shall be treated with suitable chemicals to give the rated luminous intensity.

Table 1 — Dimensions of mantle

Size (Designation)	Rated luminous intensity (lumens)	Diameter of the mantle in finished condition (mm) (Minimum)	Diameter of the burnt mantle (mm) (minimum)	Length of the burnt mantle (mm) (Minimum)
1	1 256	80	28	40
2	2 513	88	30	42
3	3 770	94	32	47
4	4 398	95	33	50
5	5 026	96	34	52

4 Requirements

4.1 Life

Mantles shall have a minimum life of 50 hours and an average life of 60 hours measured on six samples when tested in accordance with clause 5.1.

4.2 Luminous intensity

The mantle shall have a minimum luminous intensity corresponding to its rated value in Table 1, when tested in accordance with clause 5.2.

4.3 Lighting efficiency

Mantles shall have a lighting efficiency of not less than two (see 5.3).

4.4 Capacity to withstand shock

Mantles shall be capable of withstanding the shock test prescribed in clause 5.4.

5 Tests

5.1 Life test

Mantles shall be fitted to a standard lamp corresponding to the rated luminous intensity and shall be burnt continuously with minimum interruptions except when filling the oil tank of the lamp or replacing the liquefied petroleum gas cylinder. The mantles shall not be subjected to any vibration or shock.

5.2 Luminous intensity test

5.2.1 The mantle shall be fitted to a standard lamp of equivalent rated luminous intensity and tested in accordance with Annex A.

5.2.2 The luminous intensity shall not decrease by more than 5 percent after the mantle has been burnt for 45 hours.

5.3 Lighting efficiency

The lighting efficiency of the mantle shall be calculated as ratio of the mean horizontal luminous intensity to the weight in grams of fuel consumed per hour.

5.4 Shock test

The mantles shall be burnt for a continuous period of two hours. They shall be subject to shock test on a testing machine, a typical design of which is shown in Figure 1. Should more than 20 per cent of the mantles subjected to this test fail to withstand 300 shocks, the mantles shall be deemed to have failed to satisfy the requirements of this specification.

6 Packaging and marking

6.1 Packaging

6.1.1 Each mantle shall be packed in suitable material that is moisture-proof.

6.1.2 Ten or multiples of ten such packets shall be packed in a primary package.

6.2 Marking

Each package shall be marked with the following:

a) The manufacturers' name and address;

b) Registered trademark if any;

c) Rated candle power;

d) Quantity of the mantles; and

e) Country of origin.

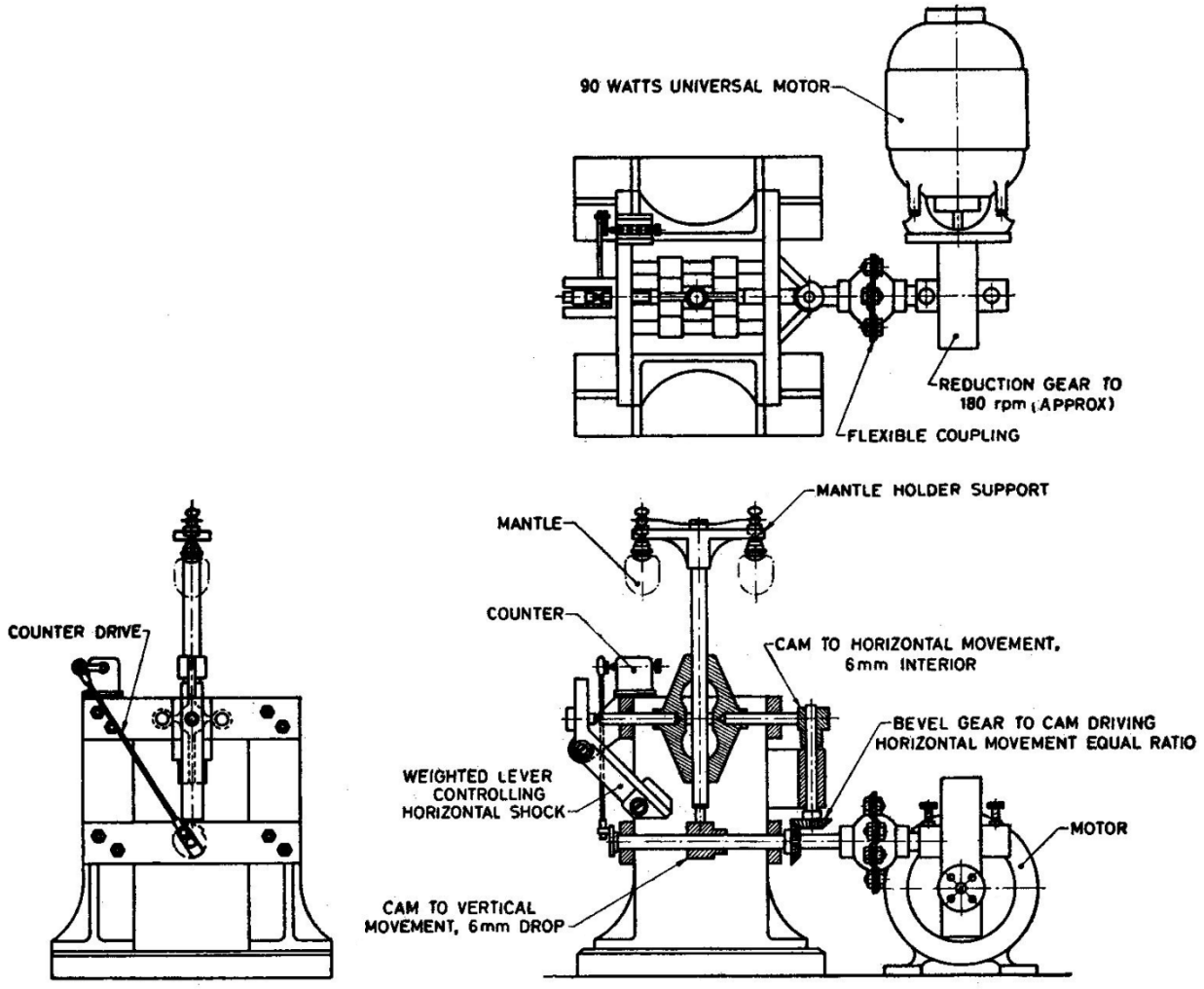

Figure 1 — Shock testing machine

Annex A
(normative)

Measurement of mean horizontal luminous intensity

A.1 Photometric equipment

A.1.1 The mean horizontal luminous intensity of the lantern shall be measured against a metal filament sub-standard electric lamp, mounted on a standard photometer bench, with a suitable form of photometer head.

A.1.2 The lantern shall be lit and allowed to burn at the working pressure of 195 kN/m^2 for at least half an hour to attain a steady condition

A.1.3 The lantern shall be mounted on a table a fixed in one of the carriages of the photometer bench. The middle portion of the mantle, photometer head, and the substandard electric lamp, shall be in the same horizontal plane and the photometer head shall be placed perpendicular to the incident light from the mantle. The substandard lamp and the photometer head shall be kept fixed at any convenient position on the bench.

A.1.4 The lantern shall be moved to and fro on one side of the photometer head, until the position of balance is found. Measurement shall be made in a horizontal plane by changing the position of the lantern in

four directions, at right angle to the axis of the appliance, differing by 900. A number of readings in each direction shall be taken and the average of all these measurements in the four directions shall be taken as the final value.

A.1.5 The temperature and the relative humidity of the test room shall be reported along with the tests.

Lot 4: Supply and Delivery of Branded Badges

IEBC badge — Specification

1 Scope

This IEBC Standard prescribes the dimensions, materials and test methods for badges used during registration of voters, elections and referenda in Kenya.

2 Normative references

The following documents are indispensable in the application of this standard:

ISO 536, *Paper and board -- Determination of grammage*

ISO 2758, *Paper -- Determination of bursting strength*

ISO 1974, *Paper -- Determination of tearing resistance -- Elmendorf method*

ISO 187, *Paper and board -- Conditioning of samples*

ISO 216, *Writing paper and certain classes of printed matter -- Trimmed sizes -- A and B series, and indication of machine direction*

KS ISO 12040, *Graphic technology — Prints and printing inks — Assessment of light fastness using filtered xenon arc light.*

3 Definitions

For the purposes of this Standard, the following definitions shall apply:

3.1
IEBC
Independent Electoral and Boundaries Commission

3.2
Badge
An identification card issued by the IEBC for the purpose of identification during registration of voters, inspection and verification of the Register of Voters, elections and referenda.

3.3
Opacity
Degree of penetration of light

3.4
Badge strap
Plastic/nylon material, with metallic or plastic clip attached used for holding the badge

3.5
Sealing
Fusion of two thin layers of pouches for protection of the badge

3.6
Sealing allowance
the portion of sealed pouch not covered by paper

3.7
Pouch
A transparent plastic material made of polyester film used for protecting the printed paper from damage

3.8
Reference sample
A badge accepted by the IEBC as the basis for supply or processing

4 Requirements

4.1 Dimensions and physical requirements

The badge shall comply with the following physical and dimensional requirements (when sealed) given in Table 1 .

Table 1 — Physical and dimensional requirements for the badge

Characteristic	Requirement	Test method
a) Dimensions when sealed millimeters(mm) i. Length ii. Width	86 ± 1 55 ± 1	KS ISO 216
b) Thickness when sealed(microns)	500 ± 0.02	KS ISO 216
c) Bonding strength of the seal (mpa), min.	240	KS 420
d) Grammage of the pouch (gsm)	95 ± 5 %	KS ISO 536
e) Light fastness of the prints	min. 5.0, Blue wool scale	KS ISO 12040
f) Sealing allowance i) Top and bottom edges (mm) ii) Side edges (mm)	20 30	ISO 216

4.2 Finish

When examined visually, the paper used for making the badge card shall be free from flaws such as fibre bundles, wood splinters, dust particles or any other defects that may impair its serviceability.

4.3 Prints

When examined visually, the format, colour and content of the prints on the badge shall be as specified by IEBC

4.4 Serialization

Each badge shall be serialized with number codes as specified by the IEBC. The serialization shall be done with indelible ink.

4.5 Finish of the badge

When examined visually, the badge pouch shall be rectangular, free from sharp edges and free from flaws.

4.6 Badge slot

The badge shall have a slot, which allows a strap to go through easily without any damage to the strap or the badge. A typical example of badge clip is shown in annex A.

4.7 Badge strap

The strap shall be a 750x20mm nylon thread with plastic clasps. It shall have I.E.B.C initials and be branded in IEBC colours.

4.8 Shelf life

The badge shall satisfy the requirements of this standard for a minimum of ten (10) years from the date of manufacture.

4.9 Categories

The badges shall be of the following categories:

a) County returning officer;
b) Deputy County returning officer;
c) Constituency Returning Officer;
d) Deputy Constituency Returning Officer ;
e) Presiding officer ;
f) Deputy Presiding officer ;
g) Polling/Counting clerk;
h) Queuing clerk;
i) IEBC Security;
j) Election observer.
k) Political party agent
l) Political Party Chief agent
m) IEBC official
n) Tallying centre agent
o) Independent candidate agent
p) Independent candidate chief agent

q) Voter educator

r) Media and

s) Any other as may be specified by IEBC

5 Packaging and marking

5.1 Packaging

The badges shall be packed in such a way as to protect them from damage during transportation and storage.

5.2 Marking of bulk packages

The following information shall be legibly and indelibly marked on the package:

a) manufacturer's name and address;

b) registered trade mark, if any;

c) the category of the badge;

d) the total number of badges in the package;

e) The serial number of the first and last badge

f) date of manufacture.

Annex A
(Normative)

Illustration of IEBC badge clip

.

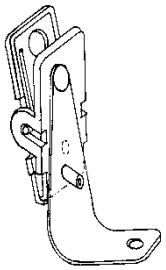

Badge clip
Figure 1B Badge clip

Annex B
(Normative)

Illustration of IEBC badge strap

Badge strap

(Insert right photo)

Figure 2B Badge strap

List of Goods and Delivery Schedule – to be supplied as when required.

[The Procuring Entity shall fill in this table, with the exception of the column "Tenderer's offered Delivery date" to be filled by the tenderer]

Line Item N°	Description of Goods	Quantity to Supplied Annually	Physical unit	Final Destination as specified in TDS	Delivery(as per Incoterms) Date		
					Earliest Delivery Date	Latest Delivery Date	Tenderer's offered Delivery date [*to be provided by the tenderer*]
[insert item No]	*[insert description of Goods]*	*[insert quantity of item to be supplied]* (Minimum) Quantities are ordered and supplied (as and when required)	*[insert physical unit for the quantity]*	*[insert place of Delivery]*	*[insert the number of days following the date of effectiveness the Contract]*	*[insert the number of days following the date of effectiveness the Contract]*	*[insert the number of days following the date of effectiveness the Contract]*
Lot 1:	Supply and Delivery of Sisal Agricultural Baler Twines	**10**	Pieces	Nairobi, Industrial Area, Likoni Road	As and When Required	Within 30 days of LPO	
Lot 2:	Supply and Delivery of Gas lamp mantles	**25**	Pieces	Nairobi, Industrial Area, Likoni Road	As and When Required	Within 30 days of LPO	
Lot 3:	Supply and Delivery of Branded Banners	**20**	Pieces	Nairobi, Industrial Area, Likoni Road	As and When Required	Within 30 days of LPO	
Lot 4:	Supply and Delivery of Branded Badges	**90**	Pieces	Nairobi, Industrial Area, Likoni Road	As and When Required	Within 30 days of LPO	

PART 3 - CONDITIONS OF CONTRACT AND CONTRACT FORMS

SECTION VI - GENERAL CONDITIONS OF CONTRACT

1. Definitions

In the Conditions of Contract ("these Conditions"), which include Special Conditions, Parts A and B, and these General Conditions, the following words and expressions shall have the meanings stated. Words indicating persons or parties include corporations and other legal entities, except where the context requires otherwise.

a) "Contract" means the Contract Agreement entered into between the Procuring Entity and the Supplier, together with the Contract Documents referred to therein, including all attachments, appendices, and all documents incorporated by reference therein.

b) "Contract Documents" means the documents listed in the Contract Agreement, including any amendments thereto.

c) "Contract Price" means the price payable to the Supplier as specified in the Contract Agreement, subject to such additions and adjustments thereto or deductions therefrom, as may be made pursuant to the Contract.

d) "Day" means calendar day.

e) "Completion" means the fulfilment of the Related Services by the Supplier in accordance with the terms and conditions set forth in the Contract.

f) "GCC" means the General Conditions of Contract.

g) "Goods" means all of the commodities, raw material, machinery and equipment, and/or other materials that the Supplier is required to supply to the Procuring Entity under the Contract.

h) "Procuring Entity" means the Procuring Entity purchasing the Goods and Related Services, as **specified in the SCC.**

i) "Related Services" means the services incidental to the supply of the goods, such as insurance, delivery, installation, commissioning, training and initial maintenance and other such obligations of the Supplier under the Contract.

j) "SCC" means the Special Conditions of Contract.

k) "Subcontractor" means any person, private or government entity, or a combination of the above, to whom any part of the Goods to be supplied or execution of any part of the Related Services is subcontracted by the Supplier.

l) "Supplier" means the person, private or government entity, or a combination of the above, whose Tender to perform the Contract has been accepted by the Procuring Entity and is named as such in the Contract Agreement.

m) **"Base Date"** means a date 30 day prior to the submission of tenders.

n) **"Laws"** means all national legislation, statutes, ordinances, and regulations and by-laws of any legally constituted public authority.

o) **"Letter of Acceptance"** means the letter of formal acceptance, signed by the contractor. Procuring Entity, including any annexed memoranda comprising agreements between and signed by both Parties.

p) **"Procuring Entity"** means the Entity named in the Special Conditions of Contract.

2. Interpretation

2.1. If the context so requires it, singular means plural and vice versa.

2.2. Incoterms

a) Unless inconsistent with any provision of the Contract, the meaning of any trade term and the rights and obligations of parties thereunder shall be as prescribed by Incoterms **specified in the SCC**.

b) The terms EXW and CIP and other similar terms, when used, shall be governed by the rules prescribed in the current edition of Incoterms specified in the **SCC** and published by the International Chamber of Commerce in Paris, France.

3. Contract Documents

Subject to the order of precedence set forth in the Contract Agreement, all documents forming the Contract (and all parts thereof) are intended to be correlative, complementary, and mutually explanatory. The Contract Agreement shall be read as a whole. The documents forming the Contract shall be interpreted in the following order of priority:

a) the Contract Agreement,

b) the Letter of Acceptance,

c) the General Conditions of Contract

d) Special Conditions of Contract

e) the Form of Tender,

f) the Specifications and Schedules of the Drawings (if any), and

g) the Schedules of Requirements, Price Schedule and any other documents forming part of the Contract.

4. Fraud and Corruption

3.1 The supplier shall comply with anti-corruption laws and guidelines and the prevailing sanctions, policies and procedures as set forth in the Laws of Kenya.

3.2 The Supplier shall disclose any commissions, gratuity or fees that may have been paid or are to be paid to agents or any other person with respect to the Tendering process or execution of the Contract. The information disclosed must include at least the name and address of the agent or other party, the amount and currency, and the purpose of the commission, gratuity or fee.

4.1 Entire Agreement

4.3.1 The Contract constitutes the entire agreement between the Procuring Entity and the Supplier and supersedes all communications, negotiations and agreements (whether written or oral) of the parties with respect thereto made prior to the date of Contract.

4.2 Amendment

No amendment or other variation of the Contract shall be valid unless it is in writing, is dated, expressly refers to the Contract, and is signed by a duly authorized representative of each party thereto.

4.3 Non-waiver

a) Subject to GCC Sub-Clause 4.5(b) below, no relaxation, forbearance, delay, or indulgence by either party in enforcing any of the terms and conditions of the Contract or the granting of time by either party to the other shall prejudice, affect, or restrict the rights of that party under the Contract, neither shall any waiver by either party of any breach of Contract operate as waiver of any subsequent or continuing breach of Contract.

b) Any waiver of a party's rights, powers, or remedies under the Contract must be in writing, dated, and signed by an authorized representative of the party granting such waiver, and must specify the right and the extent to which it is being waived.

4.4 Severability

If any provision or condition of the Contract is prohibited or rendered invalid or unenforceable, such prohibition, invalidity or unenforceability shall not affect the validity or enforceability of any other provisions and conditions of the Contract.

5. Language

5.1 The Contract as well as all correspondence and documents relating to the Contract exchanged by the Supplier and the Procuring Entity, shall be written in the **English Language.** Supporting documents and printed literature that are part of the Contract may be in another language provided they are accompanied by an accurate and certified translation of the relevant passages in the **English Language,** in which case, for purposes of interpretation of the Contract, the English language is translation shall govern.

5.2 The Supplier shall bear all costs of translation to the governing language and all risks of the accuracy of such translation, for documents provided by the Supplier.

6. Joint Venture, Consortium or Association

6.1 If the Supplier is a joint venture, consortium, or association, all of the parties shall be jointly and severally liable to the Procuring Entity for the fulfilment of the provisions of the Contract and shall designate one member of the joint venture, consortium, or association to act as a leader with authority to bind the joint venture, consortium, or association. The composition or the constitution of the joint venture, consortium, or association shall not be altered without the prior written consent of the Procuring Entity.

7. Eligibility

7.1 The Supplier and its Subcontractors shall have the nationality of an eligible country. A Supplier or Sub- contractor shall be deemed to have the nationality of a country if it is a citizen or constituted, incorporated, or registered, and operates in conformity with the provisions of the laws of that country.

7.2 All Goods and Related Services to be supplied under the Contract shall have their origin in Eligible Countries. For the purpose of this Clause, origin means the country where the goods have been grown, mined, cultivated, produced, manufactured, or processed; or through manufacture, processing, or assembly, another commercially recognized article results that differs substantially in its basic characteristics from its components.

7.3 The Tenderer, if a Kenyan firm, must submit with its tender a valid tax compliance certificate from the Kenya Revenue Authority.

8. Notices

8.1 Any notice given by one party to the other pursuant to the Contract shall be in writing to the address specified in the **SCC.** The term "in writing" means communicated in written form with proof of receipt.

8.2 A notice shall be effective when delivered or on the notice's effective date, whichever is later.

9. Governing Law

9.1 The Contract shall be governed by and interpreted in accordance with the laws of Kenya.

9.2 Throughout the execution of the Contract, the Supplier shall comply with the import of goods and services prohibitions in Kenya:

a) where, as a matter of law, compliance or official regulations, Kenya prohibits commercial relations with that country or any import of goods from that country or any

payments to any country, person, or entity in that country ; or

b) by an act of compliance with a decision of the United Nations Security Council taken under Chapter VII of the Charter of the United Nations, Kenya prohibits any import of goods from that country or any payments to any country, person, or entity.

10. Settlement of Disputes

10.1 The Procuring Entity and the Supplier shall make every effort to resolve amicably by direct negotiation any disagreement or dispute arising between them under or in connection with the Contract.

10.2 If, after thirty (30) days, the parties have failed to resolve their dispute or difference by such mutual consultation, then either the Procuring Entity or the Supplier may give notice to the other party of its intention to commence

arbitration, as hereinafter provided, as to the matter in dispute, and no arbitration in respect of this matter may be commenced unless such notice is given. Any dispute or difference in respect of which a notice of intention to commence arbitration has been given in accordance with this Clause shall be finally settled by arbitration. Arbitration may be commenced prior to or after delivery of the Goods under the Contract.

10.2 Arbitration proceedings shall be conducted as follows:

10.2.1 Any claim or dispute between the Parties arising out of or in connection with the Contract not settled amicably in accordance with Sub-Clause 10.1 shall be finally settled by arbitration.

10.2.2 No arbitration proceedings shall be commenced on any claim or dispute where notice of a claim or dispute has not been given by the applying party within thirty days of the occurrence or discovery of the matter or issue giving rise to the dispute.

10.2.3 Notwithstanding the issue of a notice as stated above, the arbitration of such a claim or dispute shall not commence unless an attempt has in the first instance been made by the parties to settle such claim or dispute amicably with or without the assistance of third parties. Proof of such attempt shall be required.

10.2.4 The Arbitrator shall, without prejudice to the generality of his powers, have powers to direct such measurements, computations, or valuations as may in his opinion be desirable in order to determine the rights of the parties and assess and award any sums which ought to have been the subject of or included in any due payments.

10.2.5 Neither Party shall be limited in the proceedings before the arbitrators to the evidence, or to the reasons for the dispute given in its notice of a claim or dispute.

10.2.6 Arbitration may be commenced prior to or after delivery of the goods. The obligations of the Parties shall not be altered by reason of any arbitration being conducted during the progress of the delivery of goods.

10.2.7 The terms of the remuneration of each or all the members of Arbitration shall be mutually agreed upon by the Parties when agreeing the terms of appointment. Each Party shall be responsible for paying one-half of this remuneration.

10.3 Arbitration Proceedings

10.3.1 Arbitration proceedings with national suppliers will be conducted in accordance with the Arbitration Laws of Kenya. In case of any claim or dispute, such claim or dispute shall be notified in writing by either party to the other with a request to submit it to arbitration and to concur in the appointment of an Arbitrator within thirty days of the notice. The dispute shall be referred to the arbitration and final decision of a person or persons to be agreed between the parties. Failing agreement to concur in the appointment of an Arbitrator, the Arbitrator shall be appointed, on the request of the applying party, by the Chairman or Vice Chairman of any of the following professional institutions;

i) Kenya National Chamber of Commerce

ii) Chartered Institute of Arbitrators (Kenya Branch)

iii) The Law Society of Kenya

10.3.2 The institution written to first by the aggrieved party shall take precedence over all other institutions.

10.3.3 Alternative Arbitration Proceedings

Alternatively, the Parties may refer the matter to the Nairobi Centre for International Arbitration (NCIA) which offers a neutral venue for the conduct of national and international arbitration with commitment to providing institutional support to the arbitral process.

10.4 Arbitration with Foreign Suppliers

10.4.1 Arbitration with foreign suppliers shall be conducted in accordance with the arbitration rules of the United Nations Commission on International Trade Law (UNCITRAL); or with proceedings administered by the International Chamber of Commerce (ICC) and conducted under the ICC Rules of Arbitration; by one or more arbitrators appointed in accordance with said arbitration rules.

10.4.2 The place of arbitration shall be a location specified in the **SCC;** and the arbitration shall be conducted in the language for communications defined in Sub-Clause 1.4 [Law and Language].

10.5 Alternative Arbitration Proceedings

Alternatively, the Parties may refer the matter to the Nairobi Centre for International Arbitration (NCIA) which offers a neutral venue for the conduct of national and international arbitration with commitment to providing institutional support to the arbitral process.

10.6 Failure to Comply with Arbitrator's Decision

10.6.1 The award of such Arbitrator shall be final and binding upon the parties.

10.6.1 In the event that a Party fails to comply with a final and binding Arbitrator's decision, then the other Party may, without prejudice to any other rights it may have, refer the matter to a competent court of law.

10.7 Contract operations continue

Notwithstanding any reference to arbitration herein,

a) the parties shall continue to perform their respective obligations under the Contract unless they otherwise agree; and

b) the Procuring Entity shall pay the Supplier any monies due the Supplier.

11. Inspections and Audit by the Procuring Entity

11.1 The Supplier shall keep, and shall cause its Subcontractors to keep, accurate and systematic accounts and records in respect of the Goods in such form and details as will clearly identify relevant time, changes and costs.

11.2 Pursuant to paragraph 2.2 of Instruction to Tenderers, the Supplier shall permit and shall cause its subcontractors to permit, the Procuring Entity and/or persons appointed by the Procuring Entity or by other statutory bodies of the Government to inspect the Site and/or the accounts and records relating to the procurement process, selection and/or contract execution, and to have such accounts and records audited by auditors appointed by the Procuring Entity. The Supplier's and its Subcontractors' attention is drawn to Sub-Clause 3.1 which provides, inter alia, that acts intended to materially impede the exercise of the Procuring Entity's inspection and audit rights constitute a prohibited practice subject to contract termination, as well as to a determination of ineligibility.

12. Scope of Supply

12.1 The Goods and Related Services to be supplied shall be as specified in the Schedule of Requirements.

13. Delivery and Documents

13.1 Subject to GCC Sub-Clause 33.1, the delivery of the Goods and completion of the Related Services shall be in accordance with the List of Goods and Delivery Schedule specified in the Supply Requirements. The details of shipping and other documents to be furnished by the Supplier are specified in the **SCC.**

14. Supplier's Responsibilities

14.1 The Supplier shall supply all the Goods and Related Services included in the Scope of Supply in accordance with GCC Clause 12, and the Delivery and Completion Schedule, as per GCC Clause 13.

15. Contract Price

15.1 Prices charged by the Supplier for the Goods supplied and the Related Services performed under the Contract shall not vary from the prices quoted by the Supplier in its Tender, with the exception of any price adjustments authorized in the **SCC.**

15.2 Where the contract price is different from the corrected tender price, in order to ensure the supplier is not paid less or more relative to the contract price (*which would be the tender price*), any partial payment valuation based on rates in the schedule of prices in the Tender, will be adjusted by a plus or minus percentage. The percentage already worked out during tender evaluation is worked out as follows: *(corrected tender price – tender price)/tender price X 100.*

16. Terms of Payment

16.1 The Supplier shall request for payment by submitting invoice(s), delivery note(s) and any other relevant documents as specified in the SCC to the Procuring Entity.

16.2 Payments shall be made promptly by the Procuring Entity, but not later than thirty (30) days after submission of an invoice by the Supplier, and after the Procuring Entity has accepted it.

16.3 Where a Procuring Entity rejects Goods and Related Services, in part or wholly, the procuring Entity shall promptly inform the Supplier to collect, replace or rectify as appropriate and give reasons for rejection. The Supplier shall submit a fresh invoice, delivery note and any other relevant documents as specified in the SCC.

16.4 The currencies in which payments shall be made to the Supplier under this Contract shall be those in which the Tender price is expressed.

16.5 In the event that the Procuring Entity fails to pay the Supplier any payment by its due date or within the period set forth in the **SCC,** the Procuring Entity may pay to the Supplier interest on the amount of such delayed payment at the rate shown in the **SCC,** for the period of delay until payment has been made in full, whether before or after judgment or arbitrage award.

17. Taxes and Duties

17.1 The Supplier shall be entirely responsible for all taxes, duties, license fees, and other such levies incurred to deliver the Goods and Related Services to the Procuring Entity at the final delivery point.

17.3 If any tax exemptions, reductions, allowances or privileges may be available to the Supplier in Kenya, the Supplier shall inform the Procuring Entity and the Procuring Entity shall use its best efforts to enable the Supplier to benefit from any such tax savings to the

maximum allowable extent.

18. Performance Security

18.1 If required as specified in the SCC, the Supplier shall, within twenty-eight (28) days of the notification of contract award, provide a performance security for the performance of the Contract in the amount specified in the **SCC.**

18.2 The proceeds of the Performance Security shall be payable to the Procuring Entity as compensation for any loss resulting from the Supplier's failure to complete its obligations under the Contract.

18.3 As specified in **the SCC**, the Performance Security, if required, shall be denominated in the currency(ies) of the Contract, or in a freely convertible currency acceptable to the Procuring Entity; and shall be in one of the formats stipulated by the Procuring Entity in **the SCC**, or in another format acceptable to the Procuring Entity.

18.4 The Performance Security shall be discharged by the Procuring Entity and returned to the Supplier not later than thirty (30) days following the date of Completion of the Supplier's performance obligations under the Contract, including any warranty obligations, unless specified otherwise in the **SCC.**

19. Copyright

19.1 The copyright in all drawings, documents, and other materials containing data and information furnished to the Procuring Entity by the Supplier herein shall remain vested in the Supplier, or, if they are furnished to the Procuring Entity directly or through the Supplier by any third party, including suppliers of materials, the copyright in such materials shall remain vested in such third party.

20. Confidential Information

20.1 The Procuring Entity and the Supplier shall keep confidential and shall not, without the written consent of the other party hereto, divulge to any third party any documents, data, or other information furnished directly or indirectly by the other party hereto in connection with the Contract, whether such information has been furnished prior to, during or following completion or termination of the Contract. Notwithstanding the above, the Supplier may furnish to its Sub-Supplier such documents, data, and other information it receives from the Procuring Entity to the extent required for the Sub Supplier to perform its work under the Contract, in which event the Supplier shall obtain from such Sub Supplier undertaking of confidentiality similar to that imposed on the Supplier under GCC Clause 20.

20.2 The Procuring Entity shall not use such documents, data, and other information received from the Supplier for any purposes unrelated to the contract. Similarly, the Supplier shall not use such documents, data, and other information received from the Procuring Entity for any purpose other than the performance of the Contract.

20.3 The obligation of a party under GCC Sub-Clauses 20.1 and 20.2 above, however, shall not apply to information that:

a) the Procuring Entity or Supplier need to share with other arms of Government or other bodies participating in the financing of the Contract; such parties shall de disclosed in **the SCC;**

b) now or hereafter enters the public domain through no fault of that party;

c) can be proven to have been possessed by that party at the time of disclosure and which was not previously obtained, directly or indirectly, from the other party; or

d) otherwise lawfully becomes available to that party from a third party that has no obligation of confidentiality.

20.4 The above provisions of GCC Clause 20 shall not in any way modify any undertaking of confidentiality given by either of the parties hereto prior to the date of the Contract in respect of the Supply or any part thereof.

20.5 The provisions of GCC Clause 20 shall survive completion or termination, for whatever reason, of the Contract.

21. Subcontracting

21.1 The Supplier shall notify the Procuring Entity in writing of all subcontracts awarded under the Contract if not already specified in the Tender. Such notification, in the original Tender or later shall not relieve the Supplier from any of its obligations, duties, responsibilities, or liability under the Contract.

21.2 Subcontracts shall comply with the provisions of GCC Clauses 3 and 7.

22. Specifications and Standards

22.1 Technical Specifications and Drawings

a) The Goods and Related Services supplied under this Contract shall conform to the technical specifications and standards mentioned in Section VI, Schedule of Requirements and, when no applicable standard is mentioned, the standard shall be equivalent or superior to the official standards whose application is appropriate to the Goods' country of origin.

b) The Supplier shall be entitled to disclaim responsibility for any design, data, drawing, specification or other document, or any modification thereof provided or designed by or on behalf of the Procuring Entity, by giving a notice of such disclaimer to the Procuring Entity.

c) Wherever references are made in the Contract to codes and standards in accordance with which it shall be executed, the edition or the revised version of such codes and standards shall be those specified in the Schedule of Requirements. During Contract execution, any changes in any such codes and standards shall be applied only after approval by the Procuring Entity and shall be treated in accordance with GCC Clause 33.

23. Packing and Documents

23.1 The Supplier shall provide such packing of the Goods as is required to prevent their damage or deterioration during transit to their final destination, as indicated in the Contract. During transit, the packing shall be sufficient to withstand, without limitation, rough handling and exposure to extreme temperatures, salt and precipitation, and open storage. Packing case size and weights shall take into consideration, where appropriate, the remoteness of the goods' final destination and the absence of heavy handling facilities at all points in transit.

23.2 The packing, marking, and documentation within and outside the packages shall comply strictly with such special requirements as shall be expressly provided for in the Contract, including additional requirements, if any, specified **in the SCC**, and in any other instructions ordered by the Procuring Entity.

24. Insurance

24.1 Unless otherwise specified in the **SCC,** the Goods supplied under the Contract shall be fully insured—in a freely convertible currency from an eligible country—against loss or damage incidental to manufacture or acquisition, transportation, storage, and delivery, in accordance with the applicable Incoterms or in the manner specified in the **SCC.**

25. Transportation and Incidental Services

25.1 Unless otherwise specified in the **SCC,** responsibility for arranging transportation of the Goods shall be in accordance with the specified Incoterms.

25.2 The Supplier may be required to provide any or all of the following services, including additional services, if any, specified **in SCC:**

a) performance or supervision of on-site assembly and/or start-up of the supplied Goods;

b) furnishing of tools required for assembly and/or maintenance of the supplied Goods;

c) furnishing of a detailed operations and maintenance manual for each appropriate unit of the supplied Goods;

d) performance or supervision or maintenance and/or repair of the supplied Goods, for a period of time agreed by the parties, provided that this service shall not relieve the Supplier of any warranty obligations under this Contract; and

e) training of the Procuring Entity's personnel, at the Supplier's plant and/or on-site, in assembly, start-up, operation, maintenance, and/or repair of the supplied Goods.

25.3 Prices charged by the Supplier for incidental services, if not included in the Contract Price for the Goods, shall be agreed upon in advance by the parties and shall not exceed the prevailing rates charged to other parties by the Supplier for similar services

26. Inspections and Tests

26.1 The Supplier shall at its own expense and at no cost to the Procuring Entity carry out all such tests and/or inspections of the Goods and Related Services as are specified in the **SCC.**

26.2 The inspections and tests may be conducted on the premises of the Supplier or its Subcontractor, at point of delivery, and/or at the Goods' final destination, or in another place in Kenya as specified in the **SCC.** Subject to GCC Sub-Clause 26.3, if conducted on the premises of the Supplier or its Subcontractor, all reasonable facilities and assistance, including access to drawings and production data, shall be furnished to the inspectors at no charge to the Procuring Entity.

26.3 The Procuring Entity or its designated representative shall be entitled to attend the tests and/or inspections referred to in GCC Sub-Clause 26.2, provided that the Procuring Entity bear all of its own costs and expenses incurred in connection with such attendance including, but not limited to, all travelling and board and lodging expenses.

26.4 Whenever the Supplier is ready to carry out any such test and inspection, it shall give a reasonable advance notice, including the place and time, to the Procuring Entity. The Supplier shall obtain from any relevant third party or manufacturer any necessary permission or consent to enable the Procuring Entity or its designated representative to attend the test and/or inspection.

26.5 The Procuring Entity may require the Supplier to carry out any test and/or inspection not required by the Contract but deemed necessary to verify that the characteristics and performance of the Goods comply with the technical specifications codes and standards under the Contract, provided that the Supplier's reasonable costs and expenses incurred in the carrying out of such test and/or inspection shall be added to the Contract Price. Further, if such test and/or inspection impedes the progress of manufacturing and/or the Supplier's performance of its other obligations under the Contract, due allowance will be made in respect of the Delivery Dates and Completion Dates and the other obligations so affected.

26.6 The Supplier shall provide the Procuring Entity with a report of the results of any such test and/or inspection.

26.7 The Procuring Entity may reject any Goods or any part thereof that fail to pass any test and/or inspection or do not conform to the specifications. The Supplier shall either rectify or replace such rejected Goods or parts thereof or make alterations necessary to meet the specifications at no cost to the Procuring Entity, and shall repeat the test and/or inspection, at no cost to the Procuring Entity, upon giving a notice pursuant to GCC Sub- Clause 26.4.

26.8 The Supplier agrees that neither the execution of a test and/or inspection of the Goods or any part thereof, nor the attendance by the Procuring Entity or its representative, nor the issue of any report pursuant to GCC Sub-Clause 26.6, shall release the Supplier from any warranties or other obligations under the Contract.

27. Liquidated Damages

27.1 Except as provided under GCC Clause 32, if the Supplier fails to deliver any or all of the Goods by the Date(s) of delivery or perform the Related Services within the period specified in the Contract, the Procuring Entity may without prejudice to all its other remedies under the Contract, deduct from the Contract Price, as liquidated damages, a sum equivalent to the percentage specified in the **SCC** of the delivered price of the delayed Goods or unperformed Services for each week or part thereof of delay until actual delivery or performance, up to a maximum deduction of the percentage specified in those **SCC.** Once the maximum is reached, the Procuring Entity may terminate the Contract pursuant to GCC Clause 35.

28. Warranty

28.1 The Supplier warrants that all the Goods are new, unused, and of the most recent or current models, and that they incorporate all recent improvements in design and materials, unless provided otherwise in the Contract.

28.2 Subject to GCC Sub-Clause 22.1(b), the Supplier further warrants that the Goods shall be free from defects arising from any act or omission of the Supplier or arising from design, materials, and workmanship, under normal use in the conditions prevailing in the country of final destination.

28.3 Unless otherwise specified in the **SCC,** the warranty shall remain valid for twelve (12) months after the Goods, or any portion thereof as the case may be, have been delivered to and accepted at the final destination indicated in the **SCC,** or for eighteen (18) months after the date of shipment from the port or place of loading in the country of origin, whichever period concludes earlier.

28.4 The Procuring Entity shall give notice to the Supplier stating the nature of any such defects together with all available evidence thereof, promptly following the discovery thereof. The Procuring Entity shall afford all reasonable opportunity for the Supplier to inspect such defects.

28.5 Upon receipt of such notice, the Supplier shall, within the period specified in the **SCC,** expeditiously repair or replace the defective Goods or parts thereof, at no cost to the Procuring Entity.

28.6 If having been notified, the Supplier fails to remedy the defect within the period specified in the **SCC,** the Procuring Entity may proceed to take within a reasonable period such remedial action as may be necessary, at the Supplier's risk and expense and without prejudice to any other rights which the Procuring Entity may have against the Supplier under the Contract.

29. Patent Indemnity

29.1 The Supplier shall, subject to the Procuring Entity's compliance with GCC Sub-Clause 29.2, indemnify and hold harmless the Procuring Entity and its employees and officers from and against any and all suits, actions or administrative proceedings, claims, demands, losses,

damages, costs, and expenses of any nature, including attorney's fees and expenses, which the Procuring Entity may suffer as a result of any infringement or alleged infringement of any patent, utility model, registered design, trademark, copyright, or other intellectual property right registered or otherwise existing at the date of the Contract by reason of:

a) the installation of the Goods by the Supplier or the use of the Goods in the country where the Site is located; and
b) the sale in any country of the products produced by the Goods.

Such indemnity shall not cover any use of the Goods or any part thereof other than for the purpose indicated by or to be reasonably inferred from the Contract, neither any infringement resulting from the use of the Goods or any part thereof, or any products produced thereby in association or combination with any other equipment, plant, or materials not supplied by the Supplier, pursuant to the Contract.

29.2 If any proceedings are brought or any claim is made against the Procuring Entity arising out of the matters referred to in GCC Sub-Clause 29.1, the Procuring Entity shall promptly give the Supplier a notice thereof, and the Supplier may at its own expense and in the Procuring Entity's name conduct such proceedings or claim and any negotiations for the settlement of any such proceedings or claim.

29.3 If the Supplier fails to notify the Procuring Entity within twenty-eight (28) days after receipt of such notice that it intends to conduct any such proceedings or claim, then the Procuring Entity shall be free to conduct the same on its own behalf.

29.4 The Procuring Entity shall, at the Supplier's request, afford all available assistance to the Supplier in conducting such proceedings or claim, and shall be reimbursed by the Supplier for all reasonable expenses incurred in so doing.

29.5 The Procuring Entity shall indemnify and hold harmless the Supplier and its employees, officers, and Subcontractors from and against any and all suits, actions or administrative proceedings, claims, demands, losses, damages, costs, and expenses of any nature, including attorney's fees and expenses, which the Supplier may suffer as a result of any infringement or alleged infringement of any patent, utility model, registered design, trademark, copyright, or other intellectual property right registered or otherwise existing at the date of the Contract arising out of or in connection with any design, data, drawing, specification, or other documents or materials provided or designed by or on behalf of the Procuring Entity.

30. Limitation of Liability

30.1 Except in cases of criminal negligence or willful misconduct,

a) the Supplier shall not be liable to the Procuring Entity, whether in contract, tort, or otherwise, for any indirect or consequential loss or damage, loss of use, loss of production, or loss of profits or interest costs, provided that this exclusion shall not apply to any obligation of the Supplier to pay liquidated damages to the Procuring Entity, and

b) the aggregate liability of the Supplier to the Procuring Entity, whether under the Contract, in tort or otherwise, shall not exceed the total Contract Price, provided that this limitation shall not apply to the cost of repairing or replacing defective equipment, or to any obligation of the supplier to indemnify the Procuring Entity with respect to patent infringement.

31. Change in Laws and Regulations

31.1 Unless otherwise specified in the Contract, if after the date of 30 days prior to date of Tender submission, any law, regulation, ordinance, order or bylaw having the force of law is enacted, promulgated, abrogated, or changed in Kenya (which shall be deemed to include any change in interpretation or application by the competent authorities) that subsequently affects the Delivery Date and/or the Contract Price, then such Delivery Date

and/or Contract Price shall be correspondingly increased or decreased, to the extent that the Supplier has thereby been affected in the performance of any of its obligations under the Contract. Notwithstanding the foregoing, such additional or reduced cost shall not be separately paid or credited if the same has already been accounted for in the price adjustment provisions where applicable, in accordance with GCC Clause 15.

32. Force Majeure

32.1 The Supplier shall not be liable for forfeiture of its Performance Security, liquidated damages, or termination for default if and to the extent that its delay in performance or other failure to perform its obligations under the Contract is the result of an event of Force Majeure.

32.2 For purposes of this Clause, "Force Majeure" means an event or situation beyond the control of the Supplier that is not foreseeable, is unavoidable, and its origin is not due to negligence or lack of care on the part of the Supplier. Such events may include, but not be limited to, acts of the Procuring Entity in its sovereign capacity, wars or revolutions, fires, floods, epidemics, quarantine restrictions, and freight embargoes.

32.3 If a Force Majeure situation arises, the Supplier shall promptly notify the Procuring Entity in writing of such condition and the cause thereof. Unless otherwise directed by the Procuring Entity in writing, the Supplier shall continue to perform its obligations under the Contract as far as is reasonably practical, and shall seek all reasonable alternative means for performance not prevented by the Force Majeure event.

33. Change Orders and Contract Amendments

33.1 The Procuring Entity may at any time order the Supplier through notice in accordance GCC Clause 8, to make changes within the general scope of the Contract in any one or more of the following:

a) drawings, designs, or specifications, where Goods to be furnished under the Contract are to be specifically manufactured for the Procuring Entity;

b) the method of shipment or packing;

c) the place of delivery; and

d) the Related Services to be provided by the Supplier.

33.2 If any such change causes an increase or decrease in the cost of, or the time required for, the Supplier's performance of any provisions under the Contract, an equitable adjustment shall be made in the Contract Price or in the Delivery/Completion Schedule, or both, and the Contract shall accordingly be amended. Any claims by the Supplier for adjustment under this Clause must be asserted within twenty-eight (28) days from the date of the Supplier's receipt of the Procuring Entity's change order.

33.3 Prices to be charged by the Supplier for any Related Services that might be needed but which were not included in the Contract shall be agreed upon in advance by the parties and shall not exceed the prevailing rates charged to other parties by the Supplier for similar services.

33.4 **Value Engineering:** The Supplier may prepare, at its own cost, a value engineering proposal at any time during the performance of the contract. The value engineering proposal shall, at a minimum, include the following;

a) the proposed change(s), and a description of the difference to the existing contract requirements;

b) a full cost/benefit analysis of the proposed change(s) including a description and estimate of costs (including life cycle costs) the Procuring Entity may incur in implementing the value engineering proposal; and

c) a description of any effect(s) of the change on performance/functionality.

33.5 The Procuring Entity may accept the value engineering proposal if the proposal demonstrates benefits that:

a) accelerates the delivery period; or

b) reduces the Contract Price or the life cycle costs to the Procuring Entity; or

c) improves the quality, efficiency or sustainability of the Goods; or

d) yields any other benefits to the Procuring Entity, without compromising the necessary functions of the Facilities.

33.6 If the value engineering proposal is approved by the Procuring Entity and results in:

a) a reduction of the Contract Price; the amount to be paid to the Supplier shall be the percentage specified **in the SCC** of the reduction in the Contract Price; or

b) an increase in the Contract Price; but results in a reduction in life cycle costs due to any benefit described in
(a) to (d) above, the amount to be paid to the Supplier shall be the full increase in the Contract Price.

33.7 Subject to the above, no variation in or modification of the terms of the Contract shall be made except by written amendment signed by the parties.

34. Extensions of Time

34.1 If at any time during performance of the Contract, the Supplier or its subcontractors should encounter conditions impeding timely delivery of the Goods or completion of Related Services pursuant to GCC Clause 13, the Supplier shall promptly notify the Procuring Entity in writing of the delay, its likely duration, and its cause. As soon as practicable after receipt of the Supplier's notice, the Procuring Entity shall evaluate the situation and may at its discretion extend the Supplier's time for performance, in which case the extension shall be ratified by the parties by amendment of the Contract.

34.2 Except in case of Force Majeure, as provided under GCC Clause 32, a delay by the Supplier in the performance of its Delivery and Completion obligations shall render the Supplier liable to the imposition of liquidated damages pursuant to GCC Clause 26, unless an extension of time is agreed upon, pursuant to GCC Sub-Clause 34.1.

35. Termination

35.1 Termination for Default

a) The Procuring Entity, without prejudice to any other remedy for breach of Contract, by written notice of default sent to the Supplier, may terminate the Contract in whole or in part:

i) if the Supplier fails to deliver any or all of the Goods within the period specified in the Contract, or within any extension thereof granted by the Procuring Entity pursuant to GCC Clause 34;

ii) if the Supplier fails to perform any other obligation under the Contract; or

iii) if the Supplier, in the judgment of the Procuring Entity has engaged in Fraud and Corruption, as defined in paragraph 2.2 a of the Appendix to the GCC, in competing for or in executing the Contract.

b) In the event the Procuring Entity terminates the Contract in whole or in part, pursuant to GCC Clause 35.1(a), the Procuring Entity may procure, upon such terms and in such manner as it deems appropriate, Goods or Related Services similar to those undelivered or not performed, and the Supplier shall be liable to the Procuring Entity for any additional costs for such similar Goods or Related Services. However, the Supplier shall continue performance of the Contract to the extent not terminated.

35.2 **Termination for Insolvency.**

The Procuring Entity may at any time terminate the Contract by giving notice to the Supplier if the Supplier becomes bankrupt or otherwise insolvent. In such event,

termination will be without compensation to the Supplier, provided that such termination will not prejudice or affect any right of action or remedy that has accrued or will accrue thereafter to the Procuring Entity

35.2 **Termination for Convenience.**

a) The Procuring Entity, by notice sent to the Supplier, may terminate the Contract, in whole or in part, at any time for its convenience. The notice of termination shall specify that termination is for the Procuring Entity's convenience, the extent to which performance of the Supplier under the Contract is terminated, and the date upon which such termination becomes effective.

b) The Goods that are complete and ready for shipment within twenty-eight (28) days after the Supplier's receipt of notice of termination shall be accepted by the Procuring Entity at the Contract terms and prices. For the remaining Goods, the Procuring Entity may elect:

   i) to have any portion completed and delivered at the Contract terms and prices; and/or

   ii) to cancel the remainder and pay to the Supplier an agreed amount for partially completed Goods and Related Services and for materials and parts previously procured by the Supplier.

36. Assignment

36.1 Neither the Procuring Entity nor the Supplier shall assign, in whole or in part, their obligations under this Contract, except with prior written consent of the other party.

37. Export Restriction

37.1 Notwithstanding any obligation under the Contract to complete all export formalities, any export restrictions attributable to the Procuring Entity, to Kenya, or to the use of the products/goods, systems or services to be supplied, which arise from trade regulations from a country supplying those products/goods, systems or services, and which substantially impede the Supplier from meeting its obligations under the Contract, shall release the Supplier from the obligation to provide deliveries or services, always provided, however, that the Supplier can demonstrate to the satisfaction of the Procuring Entity that it has completed all formalities in a timely manner, including applying for permits, authorizations and licenses necessary for the export of the products/goods, systems or services under the terms of the Contract. Termination of the Contract on this basis shall be for the Procuring Entity's convenience pursuant to Sub-Clause 35.3.

SECTION VII - SPECIAL CONDITIONS OF CONTRACT

The following Special Conditions of Contract (SCC) shall supplement and/or amend the General Conditions of Contract (GCC).Whenever there is a conflict, the provisions herein shall prevail over those in the GCC.

38. *[The Procuring Entity shall select insert the appropriate wording using the samples below or other acceptable wording,* and *delete the text in italics].*

GCC 1.1(j)	The Procuring Entity is : Independent Electoral and Boundaries Commission
GCC 28.3	The Final Destination is : Anniversary Towers, University Way, Fifth Floor P O Box 45371-00100 Nairobi. Website: www.iebc.or.ke
GCC 4.2 (a)	The meaning of the trade terms shall be as prescribed by Incoterms. If the meaning of any trade term and the rights and obligations of the parties there under shall not be as prescribed by Incoterms, they shall be as prescribed by: *[exceptional; refer to other internationally accepted trade terms]*
GCC 4.2 (b)	The version edition of Incoterms shall be *INCOTERMS 2015*
GCC 8.1	For **notices**, the Procuring Entity's address shall be: Independent Electoral and BoundariesCommission Anniversary Towers, University Way, Fifth Floor P O Box 45371-00100 Nairobi. Website: www.iebc.or.ke
GCC 10.4.2	The place of arbitration shall be Nairobi, Kenya
GCC 13.1	Details of Shipping and other Documents to be furnished by the Supplier are *[insert the required documents, such as a negotiable bill of lading, a non-negotiable sea way bill, an airway bill, a railway consignment note, a road consignment note, insurance certificate, Manufacturer's or Supplier's warranty certificate, inspection certificate issued by nominated inspection agency, Supplier's factory shipping details etc.].* The above documents shall be received by the Procuring Entity before arrival of the Goods and, if not received, the Supplier will be responsible for any consequent expenses.
GCC 15.1	The prices charged for the Goods supplied and the related Services performed *[insert "shall" or "shall not," as appropriate]* be adjustable. If prices are adjustable, the following method shall be used to calculate the price adjustment *[see attachment to these SCC for a sample Price Adjustment Formula]*

GCC 16.1	*Sample provision* GCC 16.1- The method and conditions of payment to be made to the Supplier under this Contract shall be as follows: **A. Payment for Goods supplied from abroad:** Payment of foreign currency portion shall be made in [insert currency of the Contract Price} in the following manner: (i) **Advance Payment**: Ten (10) percent of the Contract Price shall be paid within thirty (30) days of signing of the Contract, and upon submission of claim and a bank guarantee for equivalent amount valid until the Goods are delivered and, in the form, provided in the Tendering document or another form acceptable to the Procuring Entity. (ii) **On Shipment**: Eighty (80) percent of the Contract Price of the Goods shipped shall be paid through irrevocable confirmed letter of credit opened in favour of the Supplier in a bank in its country, upon submission of documents specified in GCC Clause 12. (iii) **On Acceptance**: Ten (10) percent of the Contract Price of Goods received shall be paid within thirty (30) days of receipt of the Goods upon submission of claim supported by the acceptance certificate issued by the Procuring Entity. **B. Payment of local currency portion of a foreign Supplier shall be made in Kenya shillings** within thirty (30) days of presentation of claim supported by a certificate from the Procuring Entity declaring that the Goods have been delivered and that all other contracted Services have been performed. **C. Payment for Goods and Services supplied from within Kenya:** Payment for Goods and Services supplied from within Kenya shall be made in [currency], as follows: (i) **Advance Payment**: Ten (10) percent of the Contract Price shall be paid within thirty (30) days of signing of the Contract against an invoice and a bank guarantee for the equivalent amount and in the form provided in the Tendering document or another form acceptable to the Procuring Entity. (ii) **On Delivery**: Eighty (80) percent of the Contract Price shall be paid on receipt of the Goods and upon submission of the documents specified in GCC Clause 13. The bank guarantee shall then be released. (iii) **On Acceptance**: The remaining ten (10) percent of the Contract Price shall be paid to the Supplier within thirty (30) days after the date of the acceptance certificate for the respective delivery issued by the Procuring Entity.
GCC 16.5	The payment-delay period after which the Procuring Entity shall pay interest to the supplier shall be [insert number] days. The interest rate that shall be applied is [insert number} %

GCC 18.1	A Performance Security [insert "shall" or "shall not" be required} [If a Performance Security is required, insert "the amount of the Performance Security shall be: [insert amount] [The amount of the Performance Security is usually expressed as a percentage of the Contract Price. The percentage varies according to the Procuring Entity's perceived risk and impact of non-performance by the Supplier. A 10% percentage is used under normal circumstances]
GCC 18.3	If required, the Performance Security shall be in the form of: [insert "a Demand Guarantee" or" a Performance Bond"} If required, the Performance security shall be denominated in [insert "a freely convertible currency acceptable to the Procuring Entity" or "the currencies of payment of the Contract, in accordance with their portions of the Contract Price"}
GCC 18.4	Discharge of the Performance Security shall take place: [insert date if different from the one indicated in sub clause GCC 18.4]
GCC 23.2	The packing, marking and documentation within and outside the packages shall be: [insert in detail the type of packing required, the markings in the packing and all documentation required]
GCC 24.1	The insurance coverage shall be as specified in the Incoterms. If not in accordance with Incoterms, insurance shall be as follows: [insert specific insurance provisions agreed upon, including coverage, currency and amount]
GCC 25.1	Responsibility for transportation of the Goods shall be as specified in the Incoterms. If not in accordance with Incoterms, responsibility for transportations shall be as follows: [insert "The Supplier is required under the Contract to transport the Goods to a specified place of final destination within Kenya, defined as the Project Site, transport to such place of destination in Kenya, including insurance and storage, as shall be specified in the Contract, shall be arranged by the Supplier, and related costs shall be included in the Contract Price"; or any other agreed upon trade terms (specify the respective responsibilities of the Procuring Entity and the Supplier)]
GCC 25.2	Incidental services to be provided are: [Selected services covered under GCC Clause 25.2 and/or other should be specified with the desired features. The price quoted in the Tender price or agreed with the selected Supplier shall be included in the Contract Price.]
GCC 26.1	The inspections and tests shall be: [insert nature, frequency, procedures for carrying out the inspections and tests]
GCC 26.2	The Inspections and tests shall be conducted at: [insert name(s) of location(s)]

GCC 27.1	The liquidated damage shall be: [insert number] % per week
GCC 27.1	The maximum amount of liquidated damages shall be: [insert number] %
GCC 28.3	The period of validity of the Warranty shall be: [insert number] days For purposes of the Warranty, the place(s) of final destination(s) shall be: [insert name(s) of location(s)] *Sample provision* GCC 28.3- In partial modification of the provisions, the warranty period shall be hours of operation or months from date of acceptance of the Goods or ( ) months from the date of shipment, whichever occurs earlier. The Supplier shall, in addition, comply with the performance and/or consumption guarantees specified under the Contract. If, for reasons attributable to the Supplier, these guarantees are not attained in whole or in part, the Supplier shall, at its discretion, either: a) make such changes, modifications, and/or additions to the Goods or any part thereof as may be necessary in order to attain the contractual guarantees specified in the Contract at its own cost and expense and to carry out further performance tests in accordance with GCC 26.7,or b) pay liquidated damages to the Procuring Entity with respect to the failure to meet the contractual guarantees. The rate of these liquidated damages shall be ( ). [The rate should be higher than the adjustment rate used in the Tender evaluation under TDS 34.6(!)]
GCC 28.5, GCC 28.6	The period for repair or replacement shall be: *[insert number(s)J* days.
GCC 33.4	If the value engineering proposal is approved by the Procuring Entity the amount to be paid to the Supplier shall be _% (insert appropriate percentage. The percentage is normally up to 50%) of the reduction in the Contract Price.

SECTION VIII - CONTRACT FORMS

This Section contains forms which, once completed, will form part of the Contract. The forms for Performance Security and Advance Payment Security, when required, shall only be completed by the successful tenderer after contract award.

FORM No 1: NOTIFICATION OF INTENTION TO AWARD

This Notification of Intention to Award shall be sent to each Tenderer that submitted a Tender. Send this Notification to the Tenderer's Authorized Representative named in the Tender Information Form on the format below.

----------FORMAT

1. For the attention of Tenderer's Authorized Representative

   I) Name:_____*[insert Authorized Representative's name]*

   ii) Address:_____*[insert Authorized Representative's Address]*

   iii) Telephone:_____*[insert Authorized Representative's telephone/fax numbers]*

   iv) Email Address:_____*[insert Authorized Representative's email address]*

   [IMPORTANT: insert the date that this Notification is transmitted to Tenderers. The Notification must be sent to all Tenderers simultaneously. This means on the same date and as close to the same time as possible.]

2. Date of transmission:_____[*email*] on [*date*]_____(local time)

   This Notification is sent by_____(*Name and designation*) _____

3. Notification of Intention to Award

   I) Employer:_____*[insert the name of the Employer]*

   ii) Project:_____*[insert name of project]*

   iii) Contract title:_____*[insert the name of the contract]*

   iv) Country:_____*[insert country where ITT is issued]*

   v) ITT No:_____*[insert ITT reference number from Procurement Plan]*

   This Notification of Intention to Award (Notification) notifies you of our decision to award the above contract. The transmission of this Notification begins the Standstill Period. During the Standstill Period, you may:

4. Request a debriefing in relation to the evaluation of your tender

   Submit a Procurement-related Complaint in relation to the decision to award the contract.

   a) The successful tenderer

      i) Name of successful Tender_____

      ii) Address of the successful Tender _____

      iii) Contract price of the successful Tender Kenya Shillings_____(in words _____)

   b) Other Tenderers

   Names of all Tenderers that submitted a Tender. If the Tender's price was evaluated include the evaluated price as well as the Tender price as read out. For Tenders not evaluated, give one main reason the Tender was unsuccessful.

S/No	Name of Tender	Tender Price as read out	Tender's evaluated price (Note a)	One Reason Why Not Evaluated
1				
2				
3				
4				
5				

(Note a) State NE if not evaluated

5. How to request a debriefing

a) DEADLINE: The deadline to request a debriefing expires at midnight on [*insert date*] (*local time*).

b) You may request a debriefing in relation to the results of the evaluation of your Tender. If you decide to request a debriefing your written request must be made within three (5) Business Days of receipt of this Notification of Intention to Award.

c) Provide the contract name, reference number, name of the Tenderer, contact details; and address the request for debriefing as follows:

I) Attention:_____[*insert full name of person, if applicable*]

ii) Title/position:_____[*insert title/position*]

ii) Agency:_____[*insert name of Employer*]

iii) Email address:_____[*insert email address*]

d) If your request for a debriefing is received within the 3 Days deadline, we will provide the debriefing within five (3) Business Days of receipt of your request. If we are unable to provide the debriefing within this period, the Standstill Period shall be extended by five (3) Days after the date that the debriefing is provided. If this happens, we will notify you and confirm the date that the extended Standstill Period will end.

e) The debriefing may be in writing, by phone, video conference call or in person. We shall promptly advise you in writing how the debriefing will take place and confirm the date and time.

f) If the deadline to request a debriefing has expired, you may still request a debriefing. In this case, we will provide the debriefing as soon as practicable, and normally no later than fifteen (15) Days from the date of publication of the Contract Award Notice.

6. How to make a complaint

a) Period: Procurement-related Complaint challenging the decision to award shall be submitted by midnight, [*insert date*] (local time).

b) Provide the contract name, reference number, name of the Tenderer, contact details; and address the Procurement-related Complaint as follows:

I) Attention:_____[*insert full name of person, if applicable*]

ii) Title/position:_____[*insert title/position*]

iii) Agency:_____[*insert name of Employer*]

iv) Email address:_____[*insert email address*]

c) At this point in the procurement process, you may submit a Procurement-related Complaint challenging the decision to award the contract. You do not need to have requested, or received, a debriefing before making this complaint. Your complaint must be submitted within the Standstill Period and received by us before the Standstill Period ends.

d) Further information: For more information refer to the Public Procurement and Disposals Act 2015 and its Regulations available from the Website www.ppra.go.ke or email complaints@ppra.go.ke. You should read these documents before preparing and submitting your complaint.

e) There are four essential requirements:

i) You must be an 'interested party'. In this case, that means a Tenderer who submitted a Tender in this tendering process, and is the recipient of a Notification of Intention to Award.

ii) The complaint can only challenge the decision to award the contract.

iii) You must submit the complaint within the period stated above.

iv) You must include, in your complaint, all of the information required to support your complaint.

7. **Standstill Period**

i) DEADLINE: The Standstill Period is due to end at midnight on [*insert date*] (local time).

ii) The Standstill Period lasts ten (14) Days after the date of transmission of this Notification of Intention to Award.

iii) The Standstill Period may be extended as stated in paragraph Section 5 (d) above.

If you have any questions regarding this Notification please do not hesitate to contact us.

On behalf of the Employer:

Signature:_____

Name:_____

Title/position:_____

Telephone:_____

Email: _____

FORM NO 2: NOTIFICATION OF AWARD - LETTER OF ACCEPTANCE

[letterhead paper of the Employer]

_____*[date]*

To_____*[name and address of the Contractor]*

This is to notify you that your Tender dated_____*[date]* for execution of the_____*[name of the Contract and identification number, as given in the Contract Data]* for the Accepted Contract Amount_____ *[amount in numbers and words] [name of currency]*, as corrected and modified in accordance with the Instructions to Tenderers, is hereby accepted by_____*(name of Employer).*

You are requested to furnish the Performance Security within 30 days in accordance with the Conditions of Contract, using, for that purpose, one of the Performance Security Forms included in Section VIII, Contract Forms, of the Tender Document.

Authorized Signature:_____

Name and Title of Signatory:_____

Name of Employer:_____

Attachment: *Contract Agreement:*_____

NOTIFICATION OF AWARD - LETTER OF ACCEPTANCE

[use letterhead paper of the Procuring Entity]

_____*[date]*

To:_____*[name and address of the Supplier]*

Subject:_____*Notification of Award Contract No..* . . . .

This is to notify you that your Tender dated_____*[insert date]* for execution of the_____*[insert name of the contract and identification number, as given in the SCC]* for the Accepted Contract Amount of__*[insert amount in numbers and words and name of currency]*, as corrected and modified in accordance with the Instructions to tenderers is hereby accepted by our Agency.

You are requested to furnish the Performance Security within 30 days in accordance with the Conditions of Contract, using for that purpose the of the Performance Security Form included in Section X, Contract Forms, of the Tendering document.

Authorized Signature:_____

Name and Title of Signatory:_____

Name of Agency:_____

Attachment: Contract Agreement

FORM NO 3 - CONTRACT AGREEMENT

[The successful tenderer shall fill in this form in accordance with the instructions indicated]

THIS AGREEMENT made the_____*[insert: **number**]* day of____ _____*[insert: **month**], [insert: **year**].* BETWEEN (1)_____*[insert complete name of Procuring Entity* and having its principal place of business at *[insert: address of Procuring Entity]* (hereinafter called "Procuring Entity"), of the one part; and (2)__*[insert name of Supplier]*, a corporation incorporated under the laws of *[insert: country of Supplier]* and having its principal place of business at_____*[insert: address of Supplier]* (hereinafter called "the Supplier"), of the other part.

3. WHEREAS the Procuring Entity invited Tenders for certain Goods and ancillary services, viz.,_____ *[insert brief description of Goods and Services]* and has accepted a Tender by the Supplier for the supply of those Goods and Services, the Procuring Entity and the Supplier agree as follows:

   i) In this Agreement words and expressions shall have the same meanings as are respectively assigned to them in the Contract documents referred to.

   ii) The following documents shall be deemed to form and be read and construed as part of this Agreement. This Agreement shall prevail over all other contract documents.

      a) the Letter of Acceptance

      b) the Letter of Tender

      c) the Addenda Nos.___(if any)

      d) Special Conditions of Contract

      e) General Conditions of Contract

      f) the Specification (including Schedule of Requirements and Technical Specifications)

      g) the completed Schedules (including Price Schedules)

      h) any other document listed in GCC as forming part of the Contract

   iii) In consideration of the payments to be made by the Procuring Entity to the Supplier as specified in this Agreement, the Supplier hereby covenants with the Procuring Entity to provide the Goods and Services and to remedy defects therein in conformity in all respects with the provisions of the Contract.

4. The Procuring Entity hereby covenants to pay the Supplier in consideration of the provision of the Goods and Services and the remedying of defects therein, the Contract Price or such other sum as may become payable under the provisions of the Contract at the times and in the manner prescribed by the Contract.

5. IN WITNESS whereof the parties hereto have caused this Agreement to be executed in accordance with the laws of Kenya on the day, month and year indicated above.

<u>For and on behalf of the Procuring Entity</u>

Signed:_____*[insert signature]*

in the capacity of_____*[insert title or other appropriate*

designation] In the presence of_____*[insert identification of official witness]* **For and on behalf of the Supplier**

Signed:_____*[insert signature of authorized representative(s) of the Supplier]* in the capacity of____*[insert title or other appropriate designation]* in the presence of_____*[insert identification of official witness]*

FORM NO. 4 - PERFORMANCE SECURITY [Option 1 - Unconditional Demand Bank Guarantee]

[Guarantor letterhead]

Beneficiary:_____*[insert name and Address of* Employer*]* **Date:**_____*[Insert date of issue]*

Guarantor:_____*[Insert name and address of place of issue, unless indicated in the letterhead]*

1. We have been informed that _____(hereinafter called "the Contractor") has entered into Contract No._____ _____dated _____with *(name of Employer)*_____(the Employer as the Beneficiary), for the execution of_____(hereinafter called "the Contract").

2. Furthermore, we understand that, according to the conditions of the Contract, a performance guarantee is required.

3. At the request of the Contractor, we as Guarantor, hereby irrevocably undertake to pay the Beneficiary any sum or sums not exceeding in total an amount of_____(*in words*),[1] such sum being payable in the types and proportions of currencies in which the Contract Price is payable, upon receipt by us of the Beneficiary's complying demand supported by the Beneficiary's statement, whether in the demand itself or in a separate signed document accompanying or identifying the demand, stating that the Applicant is in breach of its obligation(s) under the Contract, without the Beneficiary needing to prove or to show grounds for your demand or the sum specified therein.

4. This guarantee shall expire, no later than the …. Day of ……, 2……[2], and any demand for payment under it must be received by us at the office indicated above on or before that date.

5. The Guarantor agrees to a one-time extension of this guarantee for a period not to exceed *[six months] [one year]*, in response to the Beneficiary's written request for such extension, such request to be presented to the Guarantor before the expiry of the guarantee."

_____

[Name of Authorized Official, signature(s) and seals/stamps]

Note: All italicized text (including footnotes) is for use in preparing this form and shall be deleted from the final product.

FORM No. 5 - PERFORMANCE SECURITY [Option 2– Performance Bond]

[Note: Procuring Entities are advised to use Performance Security – Unconditional Demand Bank Guarantee instead of Performance Bond due to difficulties involved in calling Bond holder to action]

[Guarantor letterhead or SWIFT identifier code]

Beneficiary:_____*[insert name and Address of* Employer*]* **Date:**_____*[Insert date of issue]*

PERFORMANCE BOND No.:_____

Guarantor:_____*[Insert name and address of place of issue, unless indicated in the letterhead]*

1. By this Bond_____ as Principal (hereinafter called "the Contractor") and_____] as Surety (hereinafter called "the Surety"), are held and firmly bound unto_____] as Obligee (hereinafter called "the Employer") in the amount of_____for the payment of which sum well and truly to be made in the types and proportions of currencies in which the Contract Price is payable, the Contractor and the Surety bind themselves, their heirs, executors, administrators, successors and assigns, jointly and severally, firmly by these presents.

2. WHEREAS the Contractor has entered into a written Agreement with the Employer dated the _____day of , 20_____, for_____in accordance with the documents, plans, specifications, and amendments thereto, which to the extent herein provided for, are by reference made part hereof and are hereinafter referred to as the Contract.

3. NOW, THEREFORE, the Condition of this Obligation is such that, if the Contractor shall promptly and faithfully perform the said Contract (including any amendments thereto), then this obligation shall be null and void; otherwise, it shall remain in full force and effect. Whenever the Contractor shall be, and declared by the Employer to be, in default under the Contract, the Employer having performed the Employer's obligations thereunder, the Surety may promptly remedy the default, or shall promptly:

   1) complete the Contract in accordance with its terms and conditions; or

   2) obtain a tender or tenders from qualified tenderers for submission to the Employer for completing the Contract in accordance with its terms and conditions, and upon determination by the Employer and the Surety of the lowest responsive Tenderers, arrange for a Contract between such Tenderer, and Employer and make available as work progresses (even though there should be a default or a succession of defaults under the Contract or Contracts of completion arranged under this paragraph) sufficient funds to pay the cost of completion less the Balance of the Contract Price; but not exceeding, including other costs and damages for which the Surety may be liable hereunder, the amount set forth in the first paragraph hereof. The term "Balance of the Contract Price," as used in this paragraph, shall mean the total amount payable by Employer to Contractor under the Contract, less the amount properly paid by Employer to Contractor; or

   3) pay the Employer the amount required by Employer to complete the Contract in accordance with its terms and conditions up to a total not exceeding the amount of this Bond.

4. The Surety shall not be liable for a greater sum than the specified penalty of this Bond.

5. Any suit under this Bond must be instituted before the expiration of one year from the date of the issuing of the Taking-Over Certificate. No right of action shall accrue on this Bond to or for the use of any person or corporation other than the Employer named herein or the heirs, executors, administrators, successors, and assigns of the Employer.

6. In testimony whereof, the Contractor has hereunto set his hand and affixed his seal, and the Surety has caused these presents to be sealed with his corporate seal duly attested by the signature of his legal representative, this day_____of_____20____.

SIGNED ON_____on behalf of

By_____in the capacity of In the presence of

SIGNED ON_____on behalf of

By_____in the capacity of In the presence of

FORM NO. 6 - ADVANCE PAYMENT SECURITY [Demand Bank Guarantee]

[Guarantor letterhead]

Beneficiary:_____*[Insert name and Address of* Employer*]* **Date:**_____*[Insert date of issue]*

ADVANCE PAYMENT GUARANTEE No.:_____*[Insert guarantee reference number]* **Guarantor:** _____*[Insert name and address of place of issue, unless indicated in the letterhead]*

1. We have been informed that_____(hereinafter called "the Contractor") has entered into Contract No.____*dated*_____with the Beneficiary, for the execution of _____

2. Furthermore, we understand that, according to the conditions of the Contract, an advance payment in the sum _____(*in words*)is to be made against an advance payment guarantee.

3. At the request of the Contractor, we as Guarantor, hereby irrevocably undertake to pay the Beneficiary any sum or sums not exceeding in total an amount of_____(*in words*_____)[1] upon receipt by us of the Beneficiary's complying demand supported by the Beneficiary's statement, whether in the demand itself or in a separate signed document accompanying or identifying the demand, stating either that the Applicant:

   a) has used the advance payment for purposes other than the costs of mobilization in respect of the goods; or

   b) has failed to repay the advance payment in accordance with the Contract conditions, specifying the amount which the Applicant has failed to repay.

4. A demand under this guarantee may be presented as from the presentation to the Guarantor of a certificate from the Beneficiary's bank stating that the advance payment referred to above has been credited to the Contractor on its account number__at _____

5. The maximum amount of this guarantee shall be progressively reduced by the amount of the advance payment repaid by the Contractor as specified in copies of interim statements or payment certificates which shall be presented to us. This guarantee shall expire, at the latest, upon our receipt of a copy of the interim payment certificate indicating that ninety (90) percent of the Accepted Contract Amount, less provisional sums, has been certified for payment, or on the____day of_____, 2_,[2] whichever is earlier. Consequently, any demand for payment under this guarantee must be received by us at this office on or before that date.

6. The Guarantor agrees to a one-time extension of this guarantee for a period not to exceed *[six months] [one year]*, in response to the Beneficiary's written request for such extension, such request to be presented to the Guarantor before the expiry of the guarantee.

[Name of Authorized Official, signature(s) and seals/stamps]

Note: All italicized text (including footnotes) is for use in preparing this form and shall be deleted from the final product.

---

[1] *The Guarantor shall insert an amount representing the amount of the advance payment and denominated either in the currency of the advance payment as specified in the Contract.*

[2] *Insert the expected expiration date of the Time for Completion. The Employer should note that in the event of an extension of the time for completion of the Contract, the Employer would need to request an extension of this guarantee from the Guarantor. Such request must be in writing and must be made prior to the expiration date established in the guarantee.*